T: 07 3559169 M: 016 7233169 E: tonemaxs@hotmail.com

SCENT DIFFUSER

型号 Model: **DURO 2010**
外形尺寸 Size : 325(W) x 190(D) x 130(H)mm
额定电压 Voltage: DC12V
功率 Power: 8W
音量 Noise level: <16dba
重量 Weight: 0.68kg
适用容量 Coverage: 400m³
瓶子容量 Oil Bottle: 180ml PET Bottle
喷雾量 Maximum Consumption 0.8-1.2ml Per Hour
Note: Come with Day Setting
Note: Suitable For Wall Mounted Or Portable Free Standing

型号 Model: **DURO 3010B**
外形尺寸 Size : 196(W) x 91(D) x 219(H)mm
额定电压 Voltage: DC12V
功率 Power: 4W
音量 Noise level: <40dba
重量 Weight: 0.81kg
适用容量 Coverage: 150m³
瓶子容量 Oil Bottle: 200ml PET Bottle
喷雾量 Maximum Consumption 0.4-0.5ml Per Hour
Note: Come with Day Setting
Note: Suitable For Wall Mounted Or Portable Free Standing

型号 Model: **DURO 2010D**
外形尺寸 Size : 165(W) x 102(D) x 239(H)mm
额定电压 Voltage: DC12V
功率 Power: 7W
音量 Noise level: <40dba
重量 Weight: 1.2kg
适用容量 Coverage: 200m³
瓶子容量 Oil Bottle: 150ml PET Bottle
喷雾量 Maximum Consumption 2-2.5ml Per Hour
Note: Come with Day Setting
Note: Suitable For Wall Mounted Or Portable Free Standing

型号 Model: **DURO 3010**
外形尺寸 Size : 180(W) x 65(D) x 213(H)mm
额定电压 Voltage: DC12V
功率 Power: 3W
音量 Noise level: <18dba
重量 Weight: 2.5kg
适用容量 Coverage: 200m³
瓶子容量 Oil Bottle: 150ml PET Bottle
喷雾量 Maximum Consumption 0.8-1.2ml Per Hour
Note: Come with Day Setting
Note: Suitable For Aircon System Or Portable Free Standing

型号 Model: **DURO 101**
外形尺寸 Size : 300(W) x 150(D) x 370(H)mm
额定电压 Voltage: DC220V
功率 Power: 60W
音量 Noise level: <25dba
重量 Weight: 8.9kg
适用容量 Coverage: 5000m³
瓶子容量 Oil Bottle: 500ml Aluminium Bottle
喷雾量 Maximum Consumption 5-6ml Per Hour
Note: Suitable For Centralize Aircon System

型号 Model: **DURO 201**
外形尺寸 Size : 220(W) x 140(D) x 320(H)mm
额定电压 Voltage: DC220V
功率 Power: 35W
音量 Noise level: <20dba
重量 Weight: 5.7kg
适用容量 Coverage: 2000m³
瓶子容量 Oil Bottle: 500ml Aluminium Bottle
喷雾量 Maximum Consumption 2.5-3ml Per Hour
Note: Suitable For Centralize Aircon System

型号 Model: **DURO 460**
外形尺寸 Size : 202(W) x 172(D) x 555(H)mm
额定电压 Voltage: DC12V
功率 Power: 11W
音量 Noise level: <47dba
重量 Weight: 7.35kg
适用容量 Coverage: 500m³
瓶子容量 Oil Bottle: 500ml PE Bottle
喷雾量 Maximum Consumption 4.5ml Per Hour
Note: Adjustable In Volume Of Spray
Note: Portable Free Standing

型号 Model: **DURO 500**
外形尺寸 Size : 273(W) x 126(D) x 255(H)mm
额定电压 Voltage: DC240V
功率 Power: 4W
音量 Noise level: <18dba
重量 Weight: 1.21kg
适用容量 Coverage: 500m³ / 18000ft²
瓶子容量 Oil Bottle: 500ml PE Bottle
喷雾量 Maximum Consumption : 0.5 ml per hour
Note: Come with Day Setting
Note: Portable Free Standing
Note: Suitable For Centralize Aircon System

型号 Model: **DURO 400**
外形尺寸 Size : 133(W) x 133(D) x 100(H)mm
额定电压 Voltage: DC24V AC100-240V
功率 Power: 13W
重量 Weight: 310kg
适用容量 Coverage: 20m³
喷雾量 Maximum Capacity Water : 300ml
Note: Portable Free Standing

GENESIS OFFICE SUPPLY SDN BHD
T: 07 3559169 M: 016 7233169 E: tonemaxs@hotmail.com

E-CUBE STEP BIN

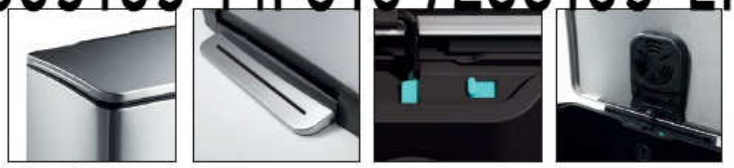

Patented Product

EK9268 **Features**

- The Damper system creates a noise-free environment for better living.
- High-quality brushed stainless steel with fingerprint proof processing keep the bins clean.
- Easy-lock design helps to keep the lid open, convenient for cleaning and changing plastic bag.
- Built-in odor-clear racks cater to individual needs and create a fresh, odorless living-space.
- Wall-leaning design helps you save precious space.
- The built-in plastic bag fixer leaves no excess plastic bag visible, keeping the bins neat, orderly, and aesthetically pleasing.

Soft Close

Fingerprint Proof

Easy Lock

EK9268-20L

EK9268-30L

EK9268-40L

EK9268-50L

Item No.	Capacity	Product Size
EK9268-20L	20 Liter/5.28 Gallon	36.6 x 32 x 44.5 cm
EK9268-30L	30 Liter/7.93 Gallon	36.6 x 32 x 62.5 cm
EK9268-40L	40 Liter/10.57 Gallon	40.3 x 34.5 x 65 cm
EK9268-50L	50 Liter/13.22 Gallon	50 x 34.5 x 65 cm

GENESIS OFFICE SUPPLY SDN BHD
T: 07 3559169 M: 016 7233169 E: tonemaxs@hotmail.com

DURO® | SHELL STEP BIN

Patented Product

EK9218 Features

- The damper system creates a noise-free environment for better living.
- Wall-leaning design helps you save precious space.
- High-quality brushed stainless steel with finger print proof processing keep the bins clean.

Soft Close

Fingerprint Proof

EK9218-6L

EK9218-10L

EK9218-18L

EK9218-30L

EK9218-50L

Item No.	Capacity	Product Size
EK9218-6L	6 Liter/1.59 Gallon	23.5 x 23 x 31.8 cm
EK9218-10L	10 Liter/2.64 Gallon	29.6 x 26 x 45 cm
EK9218-18L	18 Liter/4.76 Gallon	33.6 x 29.8 x 52.4 cm
EK9218-30L	30 Liter/7.93 Gallon	37.5 x 34 x 69 cm
EK9218-50L	50 Liter/13.22 Gallon	45.5 x 40.5 x 70.5 cm

GENESIS OFFICE SUPPLY SDN BHD
T: 07 3559169 M: 016 7233169 E: tonemaxs@hotmail.com

REJOICE STEP BIN

Patented Product

EK923 Features

- Stylish and simple outlook; quality mateials and strong structure
- The damper system creates a noise-free environment for better living.
- Built-in odor-clear racks cater to individual needs and create a fresh, odorless living-space.
- The built-in plastic bag fixer leaves no excess plastic bags visible, keeping the bins neat, orderly, and aesthetically pleasing.
- High-quality brushed stainless steel with fingerprint proof processing keep the bins clean.
- Multi-liners for easy recycling of waste.

Soft Close

Fingerprint Proof

EK9238-60L

EK9238-30L

Item No.	Capacity	Product Size
EK9238-30L	30 Liter/7.93 Gallon	26.4 x 45.9 x 63.6 cm
EK9238-60L	2x30 Liter/2x7.93 Gallon (Double Liners)	49.5 x 45.9 x 63.6 cm

GENESIS OFFICE SUPPLY SDN BHD

T: 07 3559169 M: 016 7233169 E: tonemaxs@hotmail.com

GENESIS OFFICE SUPPLY SDN BHD
T: 07 3559169 M: 016 7233169 E: tonemaxs@hotmail.com

PRESTIGE BULLET BIN

Features

- Stylish and simple outlook; quality materials and strong structure.
- Fashionable pedals make trash-throwing easy, hygienic, and convenient.
- Durable galvanized steel liner with convenient handle.
- Ideal for home, restaurant and commercial environment.

22L **EK9638-22L**
Size:Φ33X63cm

33L **EK9648-33L**
Size:Φ35X70cm

40L **EK9668-40L**
Size:Φ38X74cm

52L **EK9688-52L**
Size:Φ38X89cm

BUTTERFLY PEDAL BIN

Patented Product

EK9678/EK9679 **Features**

- Unique and innovative butterfly opening, adding a tint of spice to the mundane routine of throwing garbage.
- Stylish simple outlook; quality materials and strong structure.
- Durable galvanized steel liner with convenient handle.
- Ideal for home, restaurant and commercial environment.

Soft Close

FM APPROVED

33L **EK9678-33L**
Size:Φ35X70cm

40L **EK9679-40L**
Size:Φ35X81cm

GENESIS OFFICE SUPPLY SDN BHD
T: 07 3559169 M: 016 7233169 E: tonemaxs@hotmail.com

BUTTERFLY PEDAL BIN

GENESIS OFFICE SUPPLY SDN BHD
T: 07 3559169 M: 016 7233169 E: tonemaxs@hotmail.com

REJOICE STEP BIN

EK9228 **Features**

- The damper system creates a noise-free environment for better living.
- Slim, rectangular designs help you save precious space.
- The built-in plastic bag fixer leaves no excess plastic bags visible, keeping the bins neat, orderly, and aesthetically pleasing.
- High-quality brushed stainless steel with fingerprint proof processing keep the bins clean.
- Multi-liners for easy recycling of waste.

Soft Close

Fingerprint Proof

EK9228-36L

EK9228-24L

EK9228-12L

Item No.	Capacity	Product Size
EK9228-12L	12 Liter/3.17 Gallon	21.8 x 38.2 x 43 cm
EK9228-24L	2x12 Liter/2x3.17 Gallon (Double Liners)	40.5 x 38.2 x 43 cm
EK9228-36L	3x12 Liter/3x3.17 Gallon (Triple Liners)	59.3 x 38.2 x 43 cm

GENESIS OFFICE SUPPLY SDN BHD
T: 07 3559169 M: 016 7233169 E: tonemaxs@hotmail.com

PERFECT SENSOR BIN

Patented Product

CE

RoHS COMPLIANT

EK9288 **Features**

- Intelligent sensor mechanism, makes trash-throwing easy, hygienic and efficient.
- High-quality brushed stainless steel with fingerprint-proof processing keep the bins clean, easy for daily maintenance.
- Easy-clip design helps to hand the lid on the body easily, convenient for cleaning and changing plastic bag.
- Keep & drain design solves all leakage problem and provides easy way for cleaning.
- The innovative count-down system with lighting indicator provides a friendly interface for convenient operation.
- Strong structure with CE, ROHS & REACH approval.

Sensor

Soft Close

Fingerprint Proof

Easy-clip

Bag fixer type:

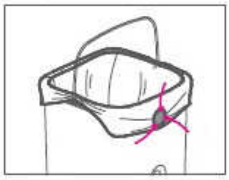
With liner

21L w/ liner

EK9288-21L

28L w/ liner

EK9288-28L

35L w/ liner

EK9288-35L

Item No.	Capacity	Product Size	Operate
EK9288-21L	21 Liter/5.55 Gallon w/ liner	27 x 27 x 57 cm	4 x 'AA' Size Battery
EK9288-28L	28 Liter/7.40 Gallon w/ liner	30.5 x 30.5 x 57 cm	4 x 'AA' Size Battery
EK9288-35L	35 Liter/9.25 Gallon w/ liner	30.5 x 30.5 x 69.2 cm	4 x 'AA' Size Battery

T: 07 3559169 M: 016 7233169 E: tonemaxs@hotmail.com

Stainless Steel Litter Bin c/w Ashtray Top
Model: RAB-050/SS
Size: 390mm(Dia) x 760mm(H)

Stainless Steel Litter Bin c/w Dome Top
Model: RAB-051/SS
Size: 390mm(Dia) x 760mm(H)

Stainless Steel Litter Bin c/w Open Top
Model: RAB-052/SS
Size: 390mm(Dia) x 760mm(H)

Stainless Steel Litter Bin c/w Flip Top
Model: FT-031/SS
Size: 345mm(Dia) x 785mm(H)

Stainless Steel Round Waste Bin c/w Dome Top
Model: RAB-117/D
Size: 345mm(Dia) x 785mm(H)

Stainless Steel Round Waste Bin c/w Half Ashtray & Half Swing Top
Model: RAB-118/H
Size: 345mm(Dia) x 785mm(H)

Stainless Steel Round Waste Bin c/w Open Top
Model: LD-RAB-013/SS
Size: 380mm(Dia) x 760mm(H)

Stainless Steel Round Waste Bin c/w Flip Top
Model: LD-RFT-086/SS
Size: 380mm(Dia) x 760mm(H)

Stainless Steel Round Waste Bin c/w 1/2 Ashtray & 1/2 Open Top
Model: LD-RAB-087/SS
Size: 380mm(Dia) x 760mm(H)

Stainless Steel Litter Bin c/w Ashtray Top
Model: RAB-040/SS
Size: 380mm(Dia) x 760mm(H)

Stainless Steel Litter Bin c/w Flat Top
Model: RAB-041/SS
Size: 380mm(Dia) x 760mm(H)

Stainless Steel Litter Bin c/w Ashtray Top
Model: RAB-060/SS
Size: 380mm(Dia) x 760mm(H)

Eternal Commercial Bin
Model: EK-9075B
Size: 520mm x 520mm x 520mm x 860mm(H)

Stainless Steel Round Waste Bin (Double Layer)
Model: LD-RB-083/SS
Size: 225mm(Dia) x 270mm(H)

Powder Coating Round Waste Bin (Double Layer)
Model: LD-RB-097/EX(GR)
Size: 225mm(Dia) x 270mm(H)

Stainless Steel Room Bin
Model: RB-036/SS
Size: 200mm(Dia) x 280mm(H)

Stainless Steel Room Bin c/w (PVC Cover)
Model: RB-035/SS
Size: 205mm(Dia) x 240mm(H)

Stainless Steel Sanitary Bin
Model: SB-084/SS
Size: 270mm(W) x 160mm(D) x 390mm(H)

Stainless Steel Round Waste Bin c/w Ashtray Top
Model: LD-RAB-091/A
Size: 300mm(Dia) x 650mm(H)

Stainless Steel Round Waste Bin c/w Ashtray Top
Model: LD-RAB-092/A
Size: 250mm(Dia) x 610mm(H)

Stainless Steel Round Waste Bin c/w Open Top
Model: LD-RAB-074/SS
Size: 250mm(Dia) x 600mm(H)

Stainless Steel Litter Bin c/w Flip Top
- Model: RFT-061/SS
  Size: 250mm(Dia) x 600mm(H)
- Model: RFT-062/SS
  Size: 250mm(Dia) x 760mm(H)

Stainless Steel Litter Bin c/w Flip Top
- Model: RFT-063/SS
  Size: 250mm(Dia) x 600mm(H)
- Model: RFT-064/SS
  Size: 250mm(Dia) x 760mm(H)

Stainless Steel Litter Bin c/w Dome Top
Model: RAB-001/D
Size: 245mm(Dia) x 600mm(H)
Model: RAB-002/D
Size: 245mm(Dia) x 760mm(H)

Stainless Steel Litter Bin c/w Flat Top
- Model: RAB-001/F
  Size: 245mm(Dia) x 600mm(H)
- Model: RAB-002/F
  Size: 245mm(Dia) x 760mm(H)

Stainless Steel Litter Bin c/w Ashtray Top
- Model: RAB-001/A
  Size: 245mm(Dia) x 600mm(H)
- Model: RAB-002/A
  Size: 245mm(Dia) x 760mm(H)

Stainless Steel Litter Bin c/w Open Top
- Model: RAB-009/OT
  Size: 245mm(Dia) x 600mm(H)
- Model: RAB-010/OT
  Size: 245mm(Dia) x 760mm(H)

Stainless Steel Round Waste Bin c/w Flip Top
Model: LD-RFT-085/SS
Size: 300mm(Dia) x 650mm(H)

Stainless Steel Litter Bin c/w Dome Top
Model: RAB-043/D
Size: 295mm(Dia) x 760mm(H)

Stainless Steel Litter Bin c/w Ashtray Top
Model: RAB-042/A
Size: 295mm(Dia) x 760mm(H)

Stainless Steel Corner Bin c/w Ashtray Top
Model: CNB-047/SS
Size: 260mm(W) x 260mm(D) x 760mm(D)

Stainless Steel Litter Bin c/w Pedal
- Model: RPD-048/SS (5L)
  Size: 205(Dia) x 295(H)mm
- Model : RPD-049/SS (10L)
  Size : 250(Dia) x 350(H)mm
  Model : RPD-045/SS (22L)
  Size : 250(Dia) x 450(H)mm

Stainless Steel Litter Bin c/w Pedal
- Model: RPD-080/SS (32L)
  Size: 300(Dia) x 450(H)mm
- Model : RPD-081/SS (43L)
  Size : 350(Dia) x 450(H)mm
- Model : RPD-082/SS (56L)
  Size : 300(Dia) x 785(H)mm
- Model : RPD-046/SS (75L)
  Size : 350(Dia) x 785(H)mm

T: 07 3559169 M: 016 7233169 E: tonemaxs@hotmail.com

Stainless Steel Rectangular Waste Bin c/w Ashtray Top
- Model: LD-RAS-090/SS
  Size: 300mm(W) x 240mm(D) x 620mm(H)
- Model: LD-RAS-073/SS
  Size: 400mm(W) x 300mm(D) x 760mm(H)

Stainless Steel + Print Coating Diamond Shape Open Top Bin
Model: LD-DAB-088/SS
Size: 310mm(W) x 260mm(D) x 650mm(H)

Stainless Steel + Print Coating Diamond Shape Waste Bin c/w Ashtray Top
Model: LD-DAB-089/SS
Size: 310mm(W) x 260mm(D) x 650mm(H)

Stainless Steel + Powder Coating Rectangular Flip Top Bin
Model: RFT-218/SS
Size: 390mm(W) x 255mm(D) x 760mm(H)

Stainless Steel + Powder Coating Square Ashtray Top
- Model: SQB-318/SS
  Size: 265mm(W) x 265mm(D) x 585mm(H)
- Model: SQB-618/SS
  Size: 265mm(W) x 265mm(D) x 760mm(H)

Stainless Steel Square Waste Bin c/w Ashtray Top
Model: SQB-125/A
Size: 300mm(W) x 300mm(D) x 740mm(H)

Stainless Steel Square Waste Bin c/w Open Top
Model: SQB-126/OT
Size: 300mm(W) x 300mm(D) x 740mm(H)

Stainless Steel Rectangular Flip Top Bin with Stopper
Model: LD-RFT-065/SS
Size: 330mm(W) x 215mm(D) x 650mm(H)

Stainless Steel Rectangular Flip Top Bin
Model: RFT-018/SS
Size: 380mm(W) x 230mm(D) x 750mm(H)

Stainless Steel Rectangular Flip Top Bin
Model: RFT-056/SS
Size: 380mm(W) x 230mm(D) x 745mm(H)

Stainless Steel Rectangular Waste Bin c/w Ashtray Top
Model: RAS-122/A
Size: 255mm(W) x 235mm(D) x 610mm(H)

Stainless Steel Rectangular Waste Bin c/w Flat Top
Model: RAS-123/F
Size: 255mm(W) x 235mm(D) x 610mm(H)

Stainless Steel Rectangular Waste Bin c/w Open Top
Model: RAS-124/OT
Size: 255mm(W) x 235mm(D) x 610mm(H)

Stainless Steel Square Ashtray Bin
- Model: SQB-003/SS
  Size: 265mm(W) x 265mm(D) x 585mm(H)
- Model: SQB-004/SS
  Size: 265mm(W) x 265mm(D) x 760mm(H)
- Model: SQB-007/SS
  Size: 240mm(W) x 240mm(D) x 585mm(H)
- Model: SQB-008/SS
  Size: 240mm(W) x 240mm(D) x 760mm(H)

Stainless Steel Open Top Square Litter Bin
- Model: SQB-005/SS
  Size: 265mm(W) x 265mm(D) x 585mm(H)
- Model: SQB-006/SS
  Size: 265mm(W) x 265mm(D) x 760mm(H)
- Model: SQB-015/SS
  Size: 240mm(W) x 240mm(D) x 585mm(H)
- Model: SQB-016/SS
  Size: 240mm(W) x 240mm(D) x 760mm(H)

Stainless Steel + Powder Coating Design Bin c/w Artificial Designed Glass Bowl on Top & Inner Liner
Model: LD-NAB-095/SS
Size: 300mm(W) x 300mm(D) x 810mm(H)

Stainless Steel Rectangular Waste Bin c/w Oval Top Opening
Model: RAS-121/OT
Size: 400mm(W) x 300mm(D) x 760mm(H)

Stainless Steel Rectangular Waste Bin c/w 1/3 Ashtray and 2/3 Open Top
Model: RAS-120/H
Size: 400mm(W) x 300mm(D) x 760mm(H)

Stainless Steel Rectangular Waste Bin c/w Flat Top
Model: RAS-119/F
Size: 400mm(W) x 300mm(D) x 760mm(H)

Stainless Steel Rectangular Ashtray Bin
Model: RAS-053/A
Size: 400mm(W) x 300mm(D) x 760mm(H)

T: 07 3559169 M: 016 7233169 E: tonemaxs@hotmail.com

Stainless Steel Semi Round Bin c/w Flat Top
Model: SRB-059/F
Size: 345mm(W) x 170mm(D) x 660mm(H)

Stainless Steel Semi Round Bin c/w Open Top
Model: SRB-055/OT
Size: 345mm(W) x 170mm(D) x 660mm(H)

Stainless Steel Semi Round Bin c/w 1/3 Ashtray 2/3 Open Top
Model: SRB-054/H
Size: 345mm(W) x 170mm(D) x 660mm(H)

Stainless Steel Semi Round Bin c/w Ashtray Top
Model: SRB-058/A
Size: 345mm(W) x 170mm(D) x 660mm(H)

Stainless Steel Semi Round Bin c/w 1/2 Ashtray 1/2 Open Top
Model: SRB-037/H
Size: 457mm(W) x 227mm(D) x 760mm(H)

Stainless Steel Semi Round Bin c/w Flat Top
Model: SRB-039/F
Size: 457mm(W) x 227mm(D) x 760mm(H)

Stainless Steel Semi Round Bin c/w Open Top
Model: SRB-044/OT
Size: 457mm(W) x 227mm(D) x 760mm(H)

Stainless Steel Semi Round Bin c/w Ashtray Top
Model: SRB-038/A
Size: 457mm(W) x 227mm(D) x 760mm(H)

Powder Coating + Wood Round Waste Bin c/w Ashtray Top & G.I. Inner Liner
Model: LD-WORB-245/W
Size: 400mm(Dia) x 755mm(H)

Powder Coating + Wood Square Waste Bin c/w Ashtray Top & G.I. Inner Liner
Model: LD-WOSQ-246/W
Size: 400mm(W) x 400mm(D) x 950mm(H)

Powder Coating + Wood Square Waste Bin c/w Ashtray Top & G.I. Inner Liner
Model: LD-WOSQ-247/W
Size: 350mm(W) x 350mm(D) x 810mm(H)

Powder Coating + Wood Round Waste Bin c/w Ashtray Top & G.I. Inner Liner
Model: LD-WORB-248/W
Size: 400mm(Dia) x 935mm(H)

GENESIS OFFICE SUPPLY SDN BHD

T: 07 3559169 M: 016 7233169 E: tonemaxs@hotmail.com

Exec
Size: 400mm(W) x 310mm (D) x 900mm(H)
Minimum Order : 5 units

Lapis
Size: 265mm(W) x 385mm (D) x 755mm(H)
Minimum order : 5 units
Option : Open Top / Flat Top / Ashtray Top / Swing Top

Box
Size: 305mm(W) x 305mm (D) x 755mm(H)
Minimum order : 5 units
Option : Open Top / Flat Top / Ashtray Top / Swing Top

Emerald
Size: 275mm(W) x 275mm (D) x 755mm(H)
Minimum order : 5 units

Elite
Size: 400mm(W) x 300mm (D) x 760mm(H)
Minimum order : 5 units

Diamond
Size: 400mm(W) x 400mm (D) x 900mm(H)
Minimum order : 5 units

Golem
Size: 350mm(W) x 280mm (D) x 800mm(H)
Minimum order : 5 units

Ruby
Size: 420mm(Dia) x 760mm(H)
Minimum order : 5 units

Recycle Wizard
Size: 786mm(W) x 390mm (D) x 840mm(H)
Minimum order : 5 set
Option : Available in 2 in 1, 3 in 1, 4 in 1

Recycle Pekka
Size: 690mm(W) x 400mm (D) x 790mm(H)
Minimum order : 5 set
Option : Available in 2 in 1, 3 in 1, 4 in 1

Recycle Minion
Size: 295mm(Dia) x 610mm(H)
Minimum order : 5 set
Option : Available in 2 in 1, 3 in 1, 4 in 1

Recycle Hog
Size: 600mm(Dia) x 390mm (D) x 890mm(H)
Minimum order : 5 set
Option : Available in 2 in 1, 3 in 1, 4 in 1

Recycle Ebay
Size: 1600mm(W) x 370mm (D) x 1000mm(H)
Minimum order : 5 set
Option : Available in 2 in 1, 3 in 1, 4 in 1

Recycle Mini Isabelle
Size: 600mm(Dia) x 250mm (D) x 550mm(H)
Minimum order : 5 set
Option : Available in 2 in 1, 3 in 1, 4 in 1

Recycle Isabelle
Size: 1580mm(W) x 370mm (D) x 800mm(H)
Minimum order : 5 set
Option : Available in 2 in 1, 3 in 1, 4 in 1

Recycle Lava
Size: 1040mm(W) x 380mm (D) x 800(H)
Minimum order : 5 set
Option : Available in 2 in 1, 3 in 1, 4 in 1

DESIGN BINS / ASHTRAY STAND (MINIMUM ORDER QUANTITY)

T: 07 3559169 M: 016 7233169 E: tonemaxs@hotmail.com

Pandora
Size: 400mm(W) x 400mm (D) x 1000mm(H)
Minimum order : 5 units
Note : Push Top

Miranda
Size: 400mm(W) x 300mm (D) x 800mm(H)
Minimum order : 5 units
Option : Ashtray/Flat Top

Phoenic
Size: 400mm(W) x 400mm (D) x 760mm(H)
Minimum order : 5 units

Abby
Size: 300mm(W) x 400mm (D) x 780mm(H)
Minimum order : 5 units

Ella
Size: 400mm(W) x 300mm (D) x 760mm(H)
Minimum order : 5 units
Option : Ashtray/Swing/ Open top

Serene
Size: 300mm(W) x 350mm (D) x 850mm(H)
Minimum order : 5 units

Marcus
Size: 400mm(W) x 300mm (D) x 760mm(H)
Minimum order : 5 units
Option : Ashtray/Swing/ Open Top

Nova
Size: 450mm(Dia) x 1050 mm(H)
Minimum order : 5 units
Option : Ashtray/Flat Top

Jayden
Size: 350mm(W) x 280mm (D) x 800mm(H)
Minimum order : 5 units

Cayden
Size: 300mm(W) x 300mm (D) x 760mm(H)
Minimum order : 5 units

Ichiro
Size: 420mm(W) x 380mm (D) x 940mm(H)
Minimum order : 5 units

Rainee
Size: 500mm(Dia) x 800mm(H)
Minimum order : 5 units
Option : Ashtray Top / Flat Top

Yuura
Size: 425mm(W) x 350mm (D) x 960mm(H)
Minimum order : 5 units

Zora
Size: 400mm(Dia) x 1000mm(H)
Minimum order : 5 units

Bluebell (Large)
Size: 590mm (Dia) x 700mm (H)

Bluebell (Medium)
Size : 450mm (Dia) x 650mm (H)
Minimum Order: 5 units

Maroon (Ashtray)
Size: 140mm(W) x 140mm (D) x 1000mm(H)
Minimum order : 5 units

Waki (Ashtray)
Size: 250mm(W) x 220mm (D) x 1000mm(H)
Minimum order : 5 units

Valora (Ashtray)
Size: 250mm(W) x 220mm (D) x 1000mm(H)
Minimum order : 5 units

Igo (Ashtray)
Size: 130mm(W) x 130mm (D) x 1000mm(H)
Minimum order : 5 units

Tammie (Ashtray)
Size: 230mm(W) x 150mm (D) x 400mm(H)
Minimum order : 5 units

T: 07 3559169 M: 016 7233169 E: tonemaxs@hotmail.com

Stainless Steel Round Waste Bin
Model: RAB-141/SS
Size: 450mm(Dia) x 1100mm(H)

Stainless Steel Oval Waste Bin c/w Open Top
Model: RAB-142/OT
Size: 640mm(W) x 410mm(D) x 920mm(H)

Stainless Steel Oval Waste Bin c/w Flat Top
Model: RAB-143/F
Size: 640mm(W) x 410mm(D) x 1080mm(H)

Stainless Steel Design Waste Bin c/w Open Top
Model: RAB-144/OT
Size: 670mm(W) x 670mm(D) x 820mm(H)

Stainless Steel Round Waste Bin c/w Flip & Ashtray Top
Model: RAB-145/H
Size: 395mm(Dia) x 910mm(H)

Stainless Steel Round Waste Bin c/w 1/2 Ashtray and 1/2 Open Top
Model: RAB-146/H
Size: 390mm(Dia) x 800mm(H)

Stainless Steel Round Waste Bin c/w Open Top
Model: RAB-147/OT
Size: 530mm(Dia) x 975mm(H)

T: 07 3559169 M: 016 7233169 E: tonemaxs@hotmail.com

Stainless Steel Waste Bin c/w Open Top & Ashtray
Model: RAB-148/OT
Size: 630mm(W) x 360mm(D) x 1100mm(H)

Stainless Steel Waste Bin c/w Open Top & Ahstray
Model: RAB-149/OT
Size: 370mm(W) x 626mm(D) x 1155mm(H)

Stainless Steel Waste Bin c/w Open Top
Model: RAB-150/OT
Size: 460mm(Dia) x 1220mm(H)

Stainless Steel Rectangular Waste Bin c/w Open Top
- Model: ROB-151/OT
  Size: 450mm(W) x 310mm(D) x 740mm(H)
- Model: ROB-152/OT
  Size: 450mm(W) x 310mm(D) x 600mm(H)

Stainless Steel Rectangular Waste Bin c/w Open Top
- Model: ROB-153/OT
  Size: 430mm(W) x 280mm(D) x 750mm(H)
- Model: ROB-154/OT
  Size: 600mm(W) x 300mm(D) x 770mm(H)

Stainless Steel Rectangular Waste Bin c/w Open Top
Model: ROB-158/OT
Size: 450mm(W) x 600mm(D) x 1045mm(H)

Stainless Steel Square Waste Bin
Model: SQB-156/SS
Size: 500mm(W) x 500mm(D) x 850mm(H)

Stainless Steel Square Waste Bin c/w Open Top
Model: SQB-157/OT
Size: 500mm(W) x 500mm(D) x 1020mm(H)

Stainless Steel Rectangular Waste Bin c/w Swing Top
Model: RFT-155/SS
Size: 600mm(W) x 400mm(D) x 800mm(H)

T: 07 3559169 M: 016 7233169 E: tonemaxs@hotmail.com

Stainless Steel
Advertisement Bin
Model: ATB-164/SS
Size: 450mm(Dia) x 1100mm(H)

Stainless Steel
Advertisement Bin
Model: ATB-165/SS
Size: 380mm(W) x 230mm(D)
x 750mm(H)

Stainless Steel + Powder Coating
Round Waste Bin c/w Open Top
Model: RAB-160/OT
Size: 450mm(Dia) x 800mm(H)

Stainless Steel Outdoor Bin with
Top Cover & Galvanised Steel Liner
Model: LD-ODB-096/SS
Bin Size: 350mm(Dia)
Total Width : 480mm
Total Height: 1150mm

Stainless Steel Waste Bin
Model: ODB-161/SS
Size: 362mm(Dia) x 847mm(H)

Stainless Steel Outdoor Waste Bin
Model: ODB-163/SS
Size: 700mm(Dia)Top x 250(Dia)Bottom
x 1075mm(H)

Stainless Steel Outdoor
Waste Bin
Model: ODB-159/OT
Size: 735mm(W) x 322mm(D)
x 1305mm(H)

Stainless Steel Hanging
Bin
Model: HB-162/SS
Size: 700mm(W) x 325mm(D)
x 703mm(H)

STAINLESS STEEL + MILD STEEL POWDER COATING RECYCLE BINS

T: 07 3559169 M: 016 7233169 E: tonemaxs@hotmail.com

Round Recycle Bins c/w Stainless Steel Body & Powder Coating Cover
Model: Recycle-136/SS
Size: 390mm(Dia) x 760mm(H)

Pedal Recycle Bins c/w Stainless Steel Body & Stainless Steel Cover
Model: Recycle-137/SS
Size: 350mm(Dia) x 785mm(H)

Round Recycle Bins c/w Stainless Steel Body & Powder Coating Cover
Model: Recycle-139/SS
Size: 390mm(Dia) x 760mm(H)

Rectangular Recycle Bins c/w Stainless Steel Body & Powder Coating Cover
Model: Recycle-138/SS
Size: 400mm(W) x 300mm(D) x 760mm(H)

Semi Round Recycle Bins c/w Stainless Steel Body & Powder Coating Cover
Model: Recycle-140/SS
Size: 345mm(W) x 170mm(D) x 660mm(H)

GENESIS OFFICE SUPPLY SDN BHD

T: 07 3559169 M: 016 7233169 E: tonemaxs@hotmail.com

Stainless Steel Round Recycle Bins
Model: Recycle-130/SS
Size: 295mm(Dia) x 760mm(H)

Round Recycle Bins c/w Stainless Steel Body & Mild Steel Cover
Model: Recycle-131/SS
Size: 295mm(Dia) x 760mm(H)

Round Recycle Bins c/w Mild Steel Body & Stainless Steel Cover
Model: Recycle-132/SS
Size: 295mm(Dia) x 760mm(H)

Stainless Steel Rectangular Recycle Bins
Model: Recycle-133/SS
Size: 380mm(W) x 230mm(D) x 740mm(H)

Rectangular Recycle Bins c/w Stainless Steel Body & Mild Steel Cover
Model: Recycle-134/SS
Size: 380mm(W) x 230mm(D) x 740mm(H)

Rectangular Recycle Bins c/w Mild Steel Body & Stainless Steel Cover
Model: Recycle-135/SS
Size: 380mm(W) x 230mm(D) x 740mm(H)

T: 07 3559169 M: 016 7233169 E: tonemaxs@hotmail.com

Stainless Steel Square Recycle Bins
Model: Recycle-127/SS
Size: 300mm(W) x 300mm(D) x 740mm(H)

Square Recycle Bins c/w Stainless Steel Body & Mild Steel Cover
Model: Recycle-128/SS
Size: 300mm(W) x 300mm(D) x 740mm(H)

Square Recycle Bins c/w Mild Steel Body & Stainless Steel Cover
Model: Recycle-129/SS
Size: 300mm(W) x 300mm(D) x 740mm(H)

Powder Coating Recycle Bin c/w Ashtray and P.P Liner
Model: LD-RECYCLE-098/EX(GR)
Size: 720mm(W) x 405mm(D) x 1000mm(H)

Powder Coating Recycle Bin c/w Ashtray and P.P Liner
Model: LD-RECYCLE-099/EX(GR)
Size: 1030mm(W) x 420mm(D) x 1000mm(H)

Powder Coating + Wood Outdoor Recycle Bin c/w Galvanised Liner
Model: LD-WORB-184/W
Bin Size: 360mm(Dia)
Total Weight: 920mm
Total Height: 1030mm

Aluminium Recycle Bin 2 Compartment c/w P.P Liner
Model: LD-RECYCLE-01
Size: 457mm(Dia) x 819mm(H)

T: 07 3559169 M: 016 7233169 E: tonemaxs@hotmail.com

Rejoice Step Bin
Model: EK9238-60L
Size: 495mm(W) x 459mm(D) x 636mm(H)

Rejoice Step Bin
Model: EK9228-36L
Size: 593mm(W) x 382mm(D) x 430mm(H)

Rejoice Step Bin
Model: EK9228-24L
Size: 405mm(W) x 382mm(D) x 430mm(H)

Stainless Steel Semi Round Open Top Recycle Bin
Model: RECYCLE-229/SS
Size: 345mm(W) x 170mm(D) x 660mm(H)

Stainless Steel Foot Pedal Recycle Bin
- Model: RECYCLE-230/SS (18L)
  Size: 336mm(W) x 298mm(D) x 524mm(H)
- Model: RECYCLE-231/SS (30L)
  Size: 375mm(W) x 340mm(D) x 690mm(H)
- Model: RECYCLE-232/SS (50L)
  Size: 406mm(W) x 406mm(D) x 705mm(H)

Stainless Steel Foot Pedal Open Top Recycle Bin
- Model: RECYCLE-223/SS (33L)
  Size: 350mm(Dia) x 700mm(H)
- Model: RECYCLE-224/SS (40L)
  Size: 350mm(Dia) x 810mm(H)

Stainless Steel Foot Pedal Recycle Bin
- Model: RECYCLE-225/SS (22L)
  Size: 330mm(Dia) x 630mm(H)
- Model: RECYCLE-226/SS (33L)
  Size: 350mm(Dia) x 700mm(H)
- Model: RECYCLE-227/SS (40L)
  Size: 380mm(Dia) x 740mm(H)
- Model: RECYCLE-228/SS (52L)
  Size: 380mm(Dia) x 890mm(H)

GENESIS OFFICE SUPPLY SDN BHD
T: 07 3559169 M: 016 7233169 E: tonemaxs@hotmail.com

Stainless Steel Flip Top Recycle Bin
Model: RECYCLE-220/SS
Size: 380mm(Dia) x 760mm(H)

Stainless Steel Flip Top Recycle Bin
Model: RECYCLE-221/SS
Size: 300mm(Dia) x 650mm(H)

Stainless Steel Open Top Recycle Bin
Model: RECYCLE-222/SS
Size: 380mm(Dia) x 760mm(H)

Stainless Steel Open Top Recycle Bin
Model: RECYCLE-233/SS
Size: 245mm(Dia) x 600mm(H)

Stainless Steel Flip Top Recycle Bin
Model: RECYCLE-234/SS
Size: 345mm(Dia) x 785mm(H)

Stainless Steel Rectangular Flip Top Recycle Bin
Model: RECYCLE-235/SS
Size: 380mm(W) x 230mm(D) x 750mm(H)

Stainless Steel Rectangular Open Top Recycle Bin
Model: RECYCLE-236/SS
Size: 1200mm(W) x 300mm(D) x 760mm(H)

T: 07 3559169 M: 016 7233169 E: tonemaxs@hotmail.com

Blue Brown Orange Green Yellow Grey

Mobile Garbage Bins with Foot Pedal
100 Litres **(Model : 100-Pedal)**
Size : 485mm(W) x 455mm(D) x 855mm(H)

Mobile Garbage Bins with Foot Pedal
120 Litres **(Model : 120-Pedal)**
Size : 470mm(W) x 550mm(D) x 955mm(H)

Blue Brown Orange Green Yellow Grey

Mobile Garbage Bins with Foot Pedal
240 Litres **(Model : 240-Pedal)**
Size : 580mm(W) x 726mm(D) x 1070mm(H)

Mobile Garbage Bins with Foot Pedal
80 Litres **(Model : 80-Pedal)**
Size : 470mm(W) x 550mm(D) x 805mm(H)

MS
SIRIM
MS 1564-1:2010
PC001153*

Blue Brown Orange Green Yellow Grey Red

Mobile Garbage Bins
120 Litres **(Model : BP 120)**
Size : 470mm(W) x 560mm(D) x 955mm(H)

Mobile Garbage Bins
240 Litres **(Model : BP 240)**
Size : 570mm(W) x 730mm(D) x 1040mm(H)

Yellow Brown Blue Orange Green

Mobile Garbage Bins
660 Litres **(Model : BP 660)**
Size : 1270mm(W) x 780mm(D) x 1220mm(H)

Mobile Garbage Bin
80 Litres **(Model : BP 80)**
Size : 540mm(W) x 470mm(D) x 780mm(H)

Mobile Garbage Bin
360 Litres **(Model : BP 360)**
Size : 710mm(W) x 840mm(D) x 1120mm(H)

Mobile Garbage Bin
1100 Litres **(Model : BP 1100)**
Size : 1395mm(W) x 1030mm(D) x 1300mm(H)

T: 07 3559169 M: 016 7233169 E: tonemaxs@hotmail.com

HOT DIPPED GALVANISED MOBILE GARBAGE BINS / LEACH BINS

Standard features for both 660L and 1100L

- Hot Dipped Galvanised steel body
- Fitted with Heavy Duty Castor Bracket *(160mm castor for 660L, 200mm castor for 1100L)*
- Full section comb lifting bar and trunnion
- Fully welded internet seams to prevent waste from seeping into container joints.
- Danish manoeuvring handles
- Double Skinned Rotationally Moulded Lid, UV Resistant with optional lid lock
- "Lid in Lid" feature for easy recycling and without the need to lift the larger outer lid *(for 1100L Bin only)*
- All manufacturing carried out under Quality Management System ISO 9001 and Environmental Management System ISO 14001
- Container complies in full with European Standard for wheeled waste containers EN 840

Hot Dipped Galvanised Mobile Garbage Bin

660 Litres **(Model : STORM-UK-660L)**
Size : 1200mm(W) x 720mm(D) x 1340mm(H)
Max Load: 264kg

660L
Max Load:264kg

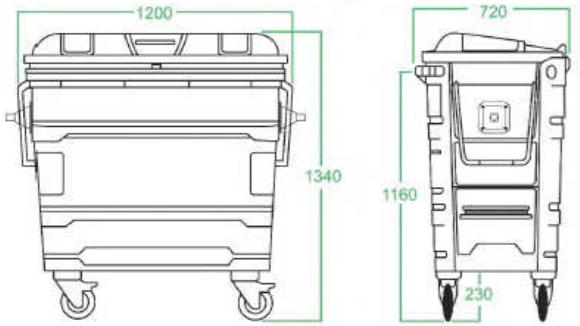

Hot Dipped Galvanised Mobile Garbage Bin

1100 Litres **(Model : STORM-UK-1100L)**
Size : 1265mm(W) x 1000mm(D) x 1410mm(H)
Max Load: 440kg

1100L
Max Load:440kg

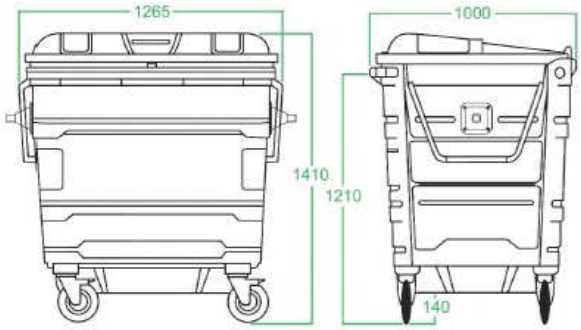

Metal Leach Bin

Colour: Blue / Green
1500 Litres **(Model : MLB-Metal)**
Size : 2010mm(W) x 1310mm(D) x 1180mm(H)

Metal Frame + PE Bin

Colour: Blue / Green
1500 Litres **(Model : PE-LEACH)**
Size : 2015mm(W) x 1420mm(D) x 1170mm(H)

GENESIS OFFICE SUPPLY SDN BHD

T: 07 3559169 M: 016 7233169 E: tonemaxs@hotmail.com

Recycling Bins
120 Litres **(Model : RB 120)**
Size : 470mm(W) x 550mm(D) x 1070mm(H)
Recycling Bins
240 Litres **(Model : RB 240)**
Size : 580mm(W) x 730mm(D) x 1210mm(H)
Option: Recycle Signage

Recycling Bins with Foot Pedal
80 Litres **(Model : 80 Pedal 3 in 1)**
Size : 470mm(W) x 550mm(D) x 805mm(H)
Recycling Bins with Foot Pedal
120 Litres **(Model : 120 Pedal 3 in 1)**
Size : 470mm(W) x 550mm(D) x 955mm(H)
Recycling Bins with Foot Pedal
240 Litres **(Model : 240 Pedal 3 in 1)**
Size : 580mm(W) x 726mm(D) x 1070mm(H)
Option: Recycle Signage

Recycling Bins
120 Litres **(Model : BP120 3 in 1)**
Size : 470mm(W) x 560mm(D) x 955mm(H)
Recycling Bins
240 Litres **(Model : BP240 3 in 1)**
Size : 570mm(W) x 730mm(D) x 1040mm(H)
Option: Recycle Signage

Combo (Fiberglass)
Size : 1100mm(W) x 380mm(D) x 900mm(H)
Note: Labels are not included
Labels are made-to-order
* Customised colours are available upon requests

Ozon (Fiberglass)
Size : 800mm(W) x 350mm(D) x 900mm(H)
Note: Labels are not included
Labels are made-to-order
* Customised colours are available upon requests

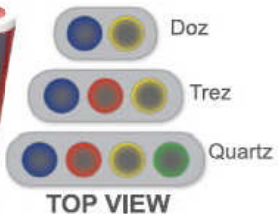

Doz (Fiberglass)
Size: 780mm(W) x 400mm(D)x 800mm(H)
Trez (Fiberglass)
Size: 1180mm(W) x 400mm(D) x 800mm(H)
Quartz (Fiberglass)
Size: 1580mm(W) x 400mm(D) x 800mm(H)
Note: Labels are not included
Labels are made-to-order
* Customised colours are available upon requests

Bonanza
Size:
Bottle: 445mm(Dia) x 1400mm(H)
Can: 450mm(Dia) x 970mm(H)
Paper: 480mm(Dia) x 1145mm(H)
Note: Labels are not included
Labels are made-to-order
* Customised colours are available upon requests

T: 07 3559169 M: 016 7233169 E: tonemaxs@hotmail.com

Recycle Zara 68 (Top Opening)
Size : 400(Dia) x 830(H)mm

Recycle Zara 68 - ST (Stainless Steel Top Opening)
Size : 400(Dia) x 830(H)mm

Recycle Haddas 40
Size : 483(Dia) x 660(H)mm

Recycle Zara 68 (Front Opening)
Size : 400mm(Dia) x 830mm(H)

Recycle Olympic 50 (Front Opening)
Size : 380mm(Dia) x 810mm(H)

Recycle Olympic 50 (Top Opening)
Size: 380mm(Dia) x 810mm(H)

Recycle Poppy 50
Size : 390mm(W) x 390mm(D) x 770mm(H)

Recycle Poppy 120
Size : 463mm(W) x 463mm(D) x 1040mm(H)

Recycle Everest 50
Size : 380mm(W) x 380mm(D) x 830mm(H)

Recycle Everest 120
Size : 510mm(W) x 510mm(D) x 1080mm(H)

Recycle Ofin 50
Size : 375mm(W) x 380mm(D) x 780mm(H)

Recycle Ofin 120
Size : 505mm(W) x 510mm(D) x 980mm(H)

Recycle Victoria 75
(Stainless Steel Swing Top)
Size : 380mm(W) x 245mm(D) x 745mm(H)

Recycle Victoria 75
(Stainless Steel Top Opening)
Size : 380mm(W) x 245mm(D) x 745mm(H)

Recycle Nana 70
(Top Opening)
Size : 355mm(W) x 355mm(D) x 700mm(H)

Recycle Daisy 90
(Stainless Steel Top Opening)
Size : 355mm(W) x 355mm(D) x 770mm(H)

GENESIS OFFICE SUPPLY SDN BHD

T: 07 3559169 M: 016 7233169 E: tonemaxs@hotmail.com

Step On Bin 30L
Size :
410mm(W) x 398mm(D) x 435mm(H)
Colour : Yellow, Grey, Blue, Green

Step On Bin 45L
Size :
410mm(W) x 398mm(D) x 600mm(H)
Colour : Yellow, Grey, Blue, Green

Step On Bin 68L
Size :
500mm(W) x 410mm(D) x 673mm(H)
Colour : Yellow, Grey, Blue, Green

Step On Bin 87L
Size :
500mm(W) x 410mm(D) x 820mm(H)
Colour : Yellow, Grey, Blue, Green

**** Colour In Catalog May Differ Slightly With Actual Product***

Step On Bin 25L
Size :
370mm(W) x 295mm(D) x 465mm(H)

Clinical Waste Bin 10L
Size : 260mm(Dia) x 330mm(H)

Clinical Waste Bin 18L
Size : 315mm(Dia) x 405mm(H)

Clinical Waste Bin 35L
Size : 375mm(Dia) x 540mm(H)

Round Pedal Bin 10L
Size : 260mm(Dia) x 330mm(H)

Round Pedal Bin 18L
Size : 315mm(Dia) x 405mm(H)

Round Pedal Bin 35L
Size : 375mm(Dia) x 540mm(H)

Clinical Waste Bin 45 Litre
c/w Powder Coating Pedal & Trolley
Bin Size: Top 365mm(Dia)
Bottom 300mm(Dia)
Overall Size: 440mm(W) x 560mm(D) x 930mm(H)

Sanitary Bin (Blue)
Size :
360mm(W) x 190mm(D)
x 620mm(H)

Sanitary Bin (Grey)
Size :
360mm(W) x 190mm(D)
x 620mm(H)

Sanitary Bin
Size :
320mm(W) x 190mm(D)
x 620mm(H)

T: 07 3559169 M: 016 7233169 E: tonemaxs@hotmail.com

Artefactual
Stone Surface

Vosge 80 (Fiberglass Open Top Square Bin)
Size :
350mm(W) x 350mm(D) x 820mm(H)

Volta 80 (Fiberglass Open Top Square Bin)
Size :
345mm(W) x 345mm(D) x 820mm(H)

Nana 70
Size :
315mm(W) x 315mm(D) x 700mm(H)

Wild 85
Size :
430mm(W) x 430mm(D) x 1000mm(H)
Options : Ashtray

Riana 60
c/w Bracket & Post
Size :
300mm(W) x 350mm(D) x 790mm(H)

Wadi 45
Size :
440mm(W) x 300mm(D) x 720mm(H)

Century 50
Size :
420mm(W) x 470mm(D) x 650mm(H)

Mitra 30
Size :
420mm(W) x 330mm(D) x 590mm(H)

Gunung 30
Size :
415mm(W) x 330mm(D) x 550mm(H)

Kenya 16
Size :
254mm(Dia) x 600mm(H)

Fire Resistance Room Bin
Size :
275mm(W) x 210mm(D) x 315mm(H)

Sondu
Size :
270mm(W) x 230mm(D) x 310xx(H)

Piton 10
Size :
300mm(W) x 178mm(D) x 300mm(H)

Gimini Room Bin
Size :
240mm(Dia)Top x 190mm(Dia) Base x 290mm(H)

Guwa
Size : 245mm(Dia) x 300mm(H)
Options: Stainless Steel Lid Top Opening
Stainless Steel Lid Swing Top

Model : CT 50L
Size : 435mm(Dia) x 525mm(H)

Model : CT 100L
Size : 535mm(Dia) x 670mm(H)

Model : CT 200L
Size : 640mm(Dia) x 840mm(H)

Model : CT 350L
Size : 770mm(Dia) x 1020mm(H)

Model : CT 550L
Size : 850mm(Dia) x 1160mm(H)

Model : CT 1100L
Size : 1130mm(Dia) x 1380mm(H)

Model : CT 1500L
Size : 1130mm(Dia) x 1830mm(H)

T: 07 3559169 M: 016 7233169 E: tonemaxs@hotmail.com

Yala 25 Top Opening
Size : 250mm(Dia) x 630mm(H)

Yala 25 Swing Top
Size : 250mm(Dia) x 630mm(H)

Suguta 40 Dome Swing Top
Size : 345mm(Dia) x 605mm(H)

Wokiro 90
Size : 380mm(Dia) x 950mm(H)
Options: Ashtray

Koka 90
Size : 495mm(Dia) x 990mm(H)
Options: Ashtray

Damas 95
c/w Inner Liner & Ashtray
Size : 480mm(Dia) x 1020mm(H)

Montana 150
Size : 575mm(Dia) x 1010mm(H)
Options: Ashtray

Gora 120
Size : 640mm(Dia) x 1010mm(H)
Options: Ashtray

Saharan 90
Size : 590mm(Dia) x 1030mm(H)
Options: Ashtray

Haddas 40
Size :
483mm(Dia) x 660mm(H)

Victoria 75
Size :
380mm(W) x 245mm(D) x 745mm(H)
Options: Stainless Steel Lid Swing Top
Stainless Steel Lid Top Opening

Daisy 90
Stainless Steel Top Opening Cover
c/w Inner Liner
Size :
355mm(W) x 355mm(D) x 770mm(H)

T: 07 3559169 M: 016 7233169 E: tonemaxs@hotmail.com

Drum
Capacity : 95 litres/ 150 litres / 200 litres / 250 litres
Size : 500 x 410 x 600(H) mm / 600 x 600 x 650(H) mm /
640 x 640 x 700(H) mm / 690 x 690 x 740(H) mm

Star 180
Size : 520mm(W) x 520mm(D)
X 820mm(H)

Star 300
Size : 780mm(W) x 780mm(D)
X 860mm(H)

Kiso 65
Size : 430mm(Dia) x 690mm(H)
Kiso 95
Size : 560mm(Dia) x 750mm(H)
Kiso 120
Size : 610mm(Dia) x 900mm(H)

Sunny 65
Size : 400mm(Dia) x 630mm(H)
Sunny 80
Size : 475mm(Dia) x 810mm(H)

Zara 68
c/w inner liner
Size : 400mm(Dia) x 830mm(H)
Options: Ashtray

LID OPTIONS

Stainless Steel Lid With Ashtray Option

Stainless Steel Lid With Open Top

PE Lid With Ashtray Option

PE Lid

GENESIS OFFICE SUPPLY SDN BHD

T: 07 3559169 M: 016 7233169 E: tonemaxs@hotmail.com

Aries16
c/w Stainless Steel Ashtray Top
Dimension: 245(Dia) x 580(H)mm

Open Top35
c/w Stainless Steel Top Opening Cover
Dimension: 300(Dia) x 710(H)mm

Umbrella Bin
Dimension: 370(Dia) x 645(H)mm

Olympic16
Dimension: 245(Dia) x 645(H)mm
Options: Ashtray

Olympic 30
c/w Ashtray Top and Inner Bin
Dimension: 285(Dia) x 815(H)mm

Olympic 50
c/w Ashtray Top and Inner Bin
Dimension: 370(Dia) x 815(H)mm

Energy 50
Dimension: 350(Dia) x 800(H)mm
Options : Ashtray

Sky 45
Semi Round Bin c/w 1/2 Ashtray & 1/2 Open Top
Dimension: 495(W) x 255(D) x 745(H)mm

Jordon 45
Semi Round Bin c/w Open Top
Dimension: 495(W) x 255(D) x 745(H)mm

Ice 45
Fiberglass Semi Round Bin c/w Ashtray Top
Dimension: 450(W) x 225(D) x 730(H)mm

Blue Sea 45
Fiberglass Semi Round Bin c/w 1/3 Ashtray & 2/3 Open Top
Dimension: 450(W) x 225(D) x 730(H)mm

Moon 45
Fiberglass Semi Round Bin Open Top
Dimension: 450(W) x 225(D) x 730(H)mm

EZ 28
c/w Bracket & Post
Dimension: 395(W) x 230(D) x 600(H)mm

Silver 28
c/w Bracket & Post
Dimension: 375(W) x 260(D) x 630(H)mm

Silver 42
c/w Bracket & Post
Dimension: 425(W) x 265(D) x 730(H)mm

Everest 50
Dimension: 380(W) x 380(D) x 820(H)mm

Everest 120
Dimension: 510(W) x 510(D) x 1080(H)mm

Flip 60
Dimension: 395(W) x 395(D) x 800(H)mm

Flip 120
Dimension: 485(W) x 485(D) x 1000(H)mm

Mountain 80
c/w Stainless Steel Cover
Dimension: 360(W) x 360(D) x 790(H)mm

Honey 85
Dimension: 630(Dia) x 730(H)mm

River 25
Polyethylene body and Fiberglass Ashtray Top
Dimension: 370(W) x 205(D) x 750(H)mm

Winter 85
c/w Inner Liner
Dimension: 450(Dia) x 1010(H)mm
Options : Ashtray

Forest 40
Dimension: 505(W) x 320(D) x 765(H)mm
Options : Ashtray

Camelia 30
Dimension: 360(W) x 255(D) x 520(H)mm

Happy 28
Dimension: 370(W) x 265(D) x 500(H)mm
Options : Ashtray

POLYETHYLENE / FIBERGLASS BINS

T: 07 3559169 M: 016 7233169 E: tonemaxs@hotmail.com

Summer 150
Dimension: 630(Dia) x 940(H)mm
Options : Ashtray

Island 60
Dimension: 450(Dia) x 850(H)mm

Sweety 85
c/w Inner Liner
Dimension: 450(Dia) x 1010(H)mm
Options : Ashtray

Winter 88
c/w Inner Liner
Dimension: 460(Dia) x 1010(H)mm
Options : Ashtray

KK 85
c/w Inner Liner
Dimension: 440(Dia) x 1100(H)mm
Options : Ashtray

K250
Dimension: 350(Dia) x 850(H)mm
Options : Ashtray

Leo 85
c/w Inner Bin
Dimension: 560(Dia) x 1080(H)mm
Options : Ashtray

Spring 80
Dimension: 420(Dia) x 1100(H)mm

Spring 150
Dimension: 600(Dia) x 1110(H)mm

Virgo 80
Dimension: 430(Dia) x 1080(H)mm

Virgo 150
Dimension: 520(Dia) x 1140(H)mm

Taurus 100
Dimension: 470(Dia) x 1000(H)mm
Options : Ashtray

Libra 180
Dimension: 540(W) x 540(D) x 1050(H)mm
Options : Ashtray

Libra 120
Dimension: 490(W) x 490(D) x 1040(H)mm
Options : Ashtray

Golden 16
Dimension: 250(W) x 250(D) x 560(H)mm

Golden 60
Dimension: 395(W) x 395(D) x 790(H)mm
Options : Ashtray

Scorpio 45
Dimension: 420(W) x 305(D) x 700(H)mm
Options : Ashtray

Magic 50
Dimension: 380(W) x 380(D) x 790(H)mm
Options : Ashtray

Stone Colours

Red Stone | Beige Stone | Green Stone | Blue Stone | Apple Green Stone | Brown Stone | Grey Stone

Standard Colours

Red | Yellow | Green | Blue | Grey | Black

** Colour In Catalog May Differ Slightly With Actual Product*

T: 07 3559169 M: 016 7233169 E: tonemaxs@hotmail.com

Stainless Steel
Q-Up Stand
Model: QUS-104/SS
Pole: 50mm(Dia)
Base: 320mm(Dia)
Height: 1010mm

Stainless Steel
Q-Up Stand
Model: QUS-111/SS
Pole: 50mm(Dia)
Base: 320mm(Dia)
Height: 970mm

Stainless Steel
Q-Up Stand
Model: QUS-100/SS
Pole: 50mm(Dia)
Base: 320mm(Dia)
Height: 920mm

Belt Colour Available:

Green Red Black Grey
Yellow Maroon Orange Blue

Brass Plated Self
Retractable Belt Q-Up
Stand
Model: QPT-110/G
Pole: 63.5mm(Dia)
Base: 320mm(Dia)
Height: 910mm
Length of Belt: 2000mm
Belt Colour: RED, BLUE, YELLOW, ORANGE, GREEN, BLACK, GREY, MAROON

Stainless Steel Self
Retractable Belt Q-Up
Stand
Model: QPT-102/SS
Pole: 63.5mm(Dia)
Base: 320mm(Dia)
Height: 910mm
Length of Belt: 2000mm
Belt Colour: RED, BLUE, YELLOW, ORANGE, GREEN, BLACK, GREY, MAROON

Stainless Steel Frame
For Self Retractable
Belt Q-Up Stand
Model: FRQ-1211/SS
(Frame only)
Size: 260mm(W) x
350mm(H) A4 size

Stainless Steel Stackable & Retractable
Q-Up Stand
Model: QPT-101/SS
Pole: 63.5 mm(Dia)
Base: 360mm(Dia)
Height: 910mm

Stainless Steel
Sign Board Stand
Model: SBS-022/SS
Frame Size: A4, A3 or
Custom Design Size
Pole: 50mm(Dia)
Base: 300mm(Dia)
Height: (A3) 1355mm
(A4) 1305mm

Stainless Steel
Sign Board Stand
Model: SBS-023/SS
Frame Size: A4, A3 or
Custom Design Size
Pole: 50mm(Dia)
Base: 300mm(Dia)
Height: (A3) 1480mm
(A4) 1400mm

Stainless Steel
Sign Board Stand
Model: SBS-057/SS
Frame Size:
305mm x 425mm (A3)
Height: 1080mm
* Height: Adjustable
* Frame can be 360° Adjustable

Wall-Mounted Self Retractable Belt Head
c/w Wall Mounted Bracket
- Model: WMRB-201
  Length of Belt: 2 meter
  Head Size: 75mm(W) x 100mm(D) x 140mm(H)
- Model: WMRB-202
  Length of Belt: 5 meter
  Head Size: 95mm(W) x 110mm(D) x 145mm(H)

Velvet Rope
For Q-Up Stand
- Model: VRP-105
  Length: 1220mm
- Model: VRP-106
  Length: 1525mm

T: 07 3559169 M: 016 7233169 E: tonemaxs@hotmail.com

Stainless Steel Planter Pot
Model: PNP-1313/SS
Size: 600mm(W) x 500mm(D) x 355mm(H)

Stainless Steel Planter Pot
Model: PNP-1314/SS
Size: 1000mm(W) x 500mm(D) x 355mm(H)

Stainless Steel Planter Pot
- Model: PNP-1304/SS
  Size: 350mm(Dia) x 300mm(H)
- Model: PNP-1305/SS
  Size: 450mm(Dia) x 320mm(H)
- Model: PNP-1306/SS
  Size: 500mm(Dia) x 400mm(H)
- Model: PNP-1307/SS
  Size: 600mm(Dia) x 500mm(H)

Stainless Steel Planter Pot
- Model: PNP-1308/SS
  Size: 350mm(Dia) x 300mm(H)
- Model: PNP-1309/SS
  Size: 450mm(Dia) x 320mm(H)
- Model: PNP-1310/SS
  Size: 500mm(Dia) x 400mm(H)
- Model: PNP-1311/SS
  Size: 600mm(Dia) x 500mm(H)

Stainless Steel Planter Pot
- Model: PNP-1302/SS
  Size: 380mm(Dia) x 280mm(H)
- Model: PNP-1303/SS
  Size: 460mm(Dia) x 380mm(H)

Stainless Steel Planter Pot
Model: PNP-1312/SS
Size: 450mm(Dia) x 320mm(H)

GENESIS OFFICE SUPPLY SDN BHD
T: 07 3559169 M: 016 7233169 E: tonemaxs@hotmail.com

Stainless Steel Benches
Model: SB-350
Size: 1250mm(W) x 453mm(D) x 453mm(H)

Stainless Steel Benches
Model: SB-351
Size: 1250mm(W) x 651mm(D) x 893mm(H)

Stainless Steel + Wood Benches
Model: SB-352
Size: 1750mm(W) x 550mm(D) x 520mm(H)

Stainless Steel + Wood Benches
Model: SB-353
Size: 1600mm(W) x 550mm(D) x 520mm(H)

Stainless Steel + Powder Coating Benches
- Model: SB-354
  Size: 1250mm(W) x 665mm(D) x 910mm(H)
- Model: SB-355
  Size: 1550mm(W) x 665mm(D) x 910mm(H)
- Model: SB-356
  Size: 1850mm(W) x 665mm(D) x 910mm(H)

Mild Steel + Powder Coating Benches
- Model: SB-357
  Size: 1250mm(W) x 465mm(D) x 625mm(H)
- Model: SB-358
  Size: 1550mm(W) x 465mm(D) x 625mm(H)
- Model: SB-359
  Size: 1850mm(W) x 465mm(D) x 625mm(H)

Stainless Steel + Powder Coating Benches
- Model: SB-360
  Size: 1250mm(W) x 665mm(D) x 910mm(H)
- Model: SB-361
  Size: 1550mm(W) x 665mm(D) x 910mm(H)
- Model: SB-362
  Size: 1850mm(W) x 665mm(D) x 910mm(H)

Mild Steel + Powder Coating Benches
- Model: SB-363
  Size: 1250mm(W) x 665mm(D) x 910mm(H)
- Model: SB-364
  Size: 1550mm(W) x 665mm(D) x 910mm(H)
- Model: SB-365
  Size: 1850mm(W) x 665mm(D) x 910mm(H)

Stainless Steel + Powder Coating Benches
- Model: SB-366
  Size: 1250mm(W) x 665mm(D) x 910mm(H)
- Model: SB-367
  Size: 1550mm(W) x 665mm(D) x 910mm(H)
- Model: SB-368
  Size: 1850mm(W) x 665mm(D) x 910mm(H)

Mild Steel + Powder Coating Benches
- Model: SB-369
  Size: 1250mm(W) x 565mm(D) x 540mm(H)
- Model: SB-370
  Size: 1550mm(W) x 565mm(D) x 540mm(H)
- Model: SB-371
  Size: 1850mm(W) x 565mm(D) x 540mm(H)

Various available powder coated colours:

(Black) (Blue) (Red) (Green) (Orange) (Beige)

Stainless Steel Bollard
Model: SBL-372-H / SBL-372-M
Size: 220mm(W) x 110mm(D) x 1000mm(H)

Stainless Steel Bollard
Model: SBL-373-H / SBL-373-M
Size: 150mm(Dia) x 1000mm(H)

Stainless Steel Bollard
Model: SBL-374-H / SBL-374-M
Size: 100mm(Dia) x 1000mm(H)

Stainless Steel Bollard
- Model: SBL-375-H / SBL-375-M
  Size: 300mm(W) x 150mm(D) x 1000mm(H)
- Model: SBL-376-H / SBL-376-M
  Size: 200mm(W) x 100mm(D) x 1000mm(H)

Stainless Steel Bollard
Model: SBL-377-H / SBL-377-M
Size: 150mm(△) x 1000mm(H)

Stainless Steel Bollard
- Model: SBL-378-H / SBL-378-M
  Size: 100mm(Dia) x 1000mm(H)
- Model: SBL-379-H / SBL-379-M
  Size: 150mm(Dia) x 1000mm(H)

Stainless Steel Bollard
- Model: SBL-380-H / SBL-380-M
  Size: 100mm(Dia) x 1000mm(H)
- Model: SBL-381-H / SBL-381-M
  Size: 150mm(Dia) x 1000mm(H)

Stainless Steel Bollard
Model: SBL-382-H / SBL-382-M
Size: 200mm(W) x 100mm(D) x 1000mm(H)

Stainless Steel Bollard
Model: SBL-383-H / SBL-383-M
Size: 300mm(Dia)Top 100mm(Dia)Bottom x 600mm(H)

Stainless Steel Bollard
Model: SBL-384-H / SBL-384-M
Size: 150mm(W) x 150mm(D) x 1200mm(H)

Stainless Steel Bollard
Model: SBL-385-H / SBL-385-M
Size: 170mm(Dia) x 1300mm(H)

* NOTE : H = Hairline Finish
M = Mirror Finish

T: 07 3559169 M: 016 7233169 E: tonemaxs@hotmail.com

Smoke Bin c/w Ground Mounted
Model: ASH-174/SS
Size: 218mm(W) x 218mm(D) x 1005mm(H)

Smoke Bin c/w Ground Mounted
Model: ASH-175/SS
Size: 180mm(W) x 180mm(D) x 1000mm(H)

Smoke Bin c/w Ground Mounted
Model: ASH-176/SS
Size: 345mm(W) x 170mm(D) x 1200mm(H)

Smoke Bin c/w Ground Mounted
Model: ASH-177/SS
Size: 125mm(Dia) x 610mm(H)

Smoke Bin c/w Wall Mounted
Model: ASH-179/SS
Size: 155mm(W) x 125mm(D) x 610mm(H)

Smoke Bin c/w Pole & Base
Model: ASH-178/SS
Size: 170mm(W) x 125mm(D) x 980mm(H)

Stainless Steel Standing Ashtray
Model: LD-ASH-093/SS
Top Size: 100mm(Dia)
Bottom Size: 225mm(Dia)
Height: 1100mm

Stainless Steel Standing Ashtray
Model: LD-ASH-094/SS
Top Size: 100mm(Dia)
Bottom Size: 225mm(Dia)
Height: 1100mm

T: 07 3559169 M: 016 7233169 E: tonemaxs@hotmail.com

Stainless Steel Wall Mounted Ashtray Bin
Model: WMA-166/SS
Size: 190mm(W) x 100mm(D) x 280mm(H)

Stainless Steel Wall Mounted Ashtray Bin
Model: WMA-167/SS
Size: 240mm(W) x 130mm(D) x 200mm(H)

Stainless Steel Wall Mounted Ashtray Bin
- Model: WMA-168/SS
  Size: 150mm(W) x 150mm(D) x 360mm(H)
- Model: WMA-169/SS
  Size: 250mm(W) x 150mm(D) x 500mm(H)

Stainless Steel Wall Mounted Ashtray Bin
Model: WMA-170/SS
Size: 300mm(W) x 100mm(D) x 400mm(H)

Stainless Steel Wall Mounted Ashtray Bin
Model: WMA-172/SS
Size: 250mm(W) x 150mm(D) x 500mm(H)

Stainless Steel Wall Mounted Ashtray Bin
Model: WMA-171/SS
Size: 110mm(W) x 200mm(D) x 300mm(H)

Stainless Steel Table Ashtray
Model: WMA-173/SS
Size: 123mm(W) x 89mm(D) x 23mm(H)

GENESIS OFFICE SUPPLY SDN BHD
T: 07 3559169 M: 016 7233169 E: tonemaxs@hotmail.com

Crown Birdcage Cart
* Come with Gold Plated and 200mm(Dia) Gold Plated Pneumatic Wheels
Model: LD-BCT-417/GP
Size: 1150mm(W) x 700mm(D) x 1950mm(H)

Stainless Steel Birdcage Cart
* Come with 150mm(Dia) Non Marking Wheels
Model: LD-BCT-411/SS
Size: 1050mm(W) x 610mm(D) x 1860mm(H)

Stainless Steel Baggage Trolley
* Come with 150mm(Dia) Non Marking Wheels
Model: LD-BGT-416/SS
Size: 1050mm(W) x 500mm(D) x 1780mm(H)

Stainless Steel Birdcage Styling Cart (Hairline Finish)
* Come with 200mm(Dia) Pneumatic Wheels
Model: LD-BCT-412/SS
Size: 1140mm(W) x 670mm(D) x 1900mm(H)

Stainless Steel Birdcage Styling Cart (Hairline Finish)
* Come with 200mm(Dia) Pneumatic Wheels
Model: LD-BCT-413/SS
Size: 1140mm(W) x 670mm(D) x 1900mm(H)

T: 07 3559169 M: 016 7233169 E: tonemaxs@hotmail.com

Stainless Steel Bell Boy Hand Truck w/o Carpet
Model: BBT-402/SS
Size: 400mm(W) x 630mm(D) x 1160mm(H)

Stainless Steel Bell Boy Hand Truck c/w Carpet
Model: BBT-403/SS
Size: 400mm(W) x 630mm(D) x 1160mm(H)

Stainless Steel Banquet Chair Trolley
Model: BQC-405/SS
Size: 530mm(W) x 610mm(D) x 1170mm(H)

Stainless Steel Bell Boy Trolley
* Come with 200mm(Dia) Pneumatic wheels
Model: LD-BBT-414/SS
Size: 500mm(W) x 400mm(D) x 1220mm(H)

Stainless Steel Automatic Double Umbrella Stand
Model: LD-DUS-607/SS
Size: 410mm(W) x 290mm(D) x 800mm(H)

Stainless Steel Umbrella Stand
Model: UMS-601/SS
Size: 635mm(W) x 360mm(D) x 800mm(H)

Stainless Steel Folding Luggage Stand
Model: FLS-700/SS
Size: 550mm(W) x 500mm(D) x 700mm(H)

Stainless Steel Service Tray Stand
Model: STS-702
Size: 520mm(W) x 410mm(D) x 800mm(H)

Stainless Steel Linen Hanging Trolley c/w Bottom Basket Compartment
Model: LD-LHT-301/SS
Size: 1220mm(W) x 545mm(D) x 1700mm(H)

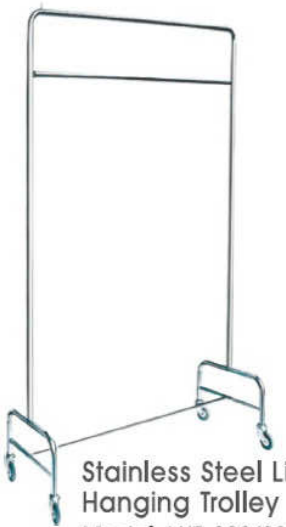

Stainless Steel Linen Hanging Trolley
Model: LHT-300/SS
Size: 1219mm(W) x 406mm(D) x 1828mm(H)

Stainless Steel Multipurpose Shelf
Model: SMS-1105/SS
Size: 1100mm(W) x 500mm(D) x 1500mm(H)
Maximum loading weight 100kg per tier

GENESIS OFFICE SUPPLY SDN BHD

T: 07 3559169 M: 016 7233169 E: tonemaxs@hotmail.com

Powder Coating Maid Trolley c/w Organiser and Door
* Come with 200mm(Dia) Non Marking Wheels and All Round Bumper
Model: LD-MDT-207/EX(GR)
Size: 1460mm(W) x 540mm(D) x 1370mm(H)

Powder Coating Maid Trolley c/w Organiser and Cover
* Come with 150mm(Dia) Non Marking Wheels and All Round Bumper
Model: LD-MDT-208/EX(GR)
Size: 1460mm(W) x 480mm(D) x 1180mm(H)

Maid Trolley
Model: PMT-509/P
Size: 1480mm(W) x 550mm(D) x 1000mm(H)

Maid Trolley c/w Door
Model: PMT-510/P
Size: 1540mm(W) x 540mm(D) x 1285mm(H)

Powder Coating Clean Linen Trolley
Model: CLT-800/EX(GR)
Size: 720mm(W) x 535mm(D) x 1800mm(H)

Stainless Steel Maid Trolley
- Model: MDT-206/SS (Big)
  Size: 1486mm(W) x 559mm(D) x 1168mm(H)
- Model: MDT-204/SS (Small)
  Size: 1310mm(W) x 559mm(D) x 886mm(H)

Powder Coating Maid Trolley
Model: MDT-206/EX(GR)
Size: 1486mm(W) x 559mm(D) x 1168mm(H)

Stainless Steel Escort Cart
Model: ECT-900/SS
Size: 1200mm(W) x 450mm(D) x 1040mm(H)

T: 07 3559169 M: 016 7233169 E: tonemaxs@hotmail.com

Stainless Steel Collection & Sorting of Soiled Linen Trolley
Model: CSL-501/SS
Size: 1120mm(W) x 530mm(D) x 950mm(H)

Stainless Steel Soiled Linen Trolley
Model: SLT-505/SS
Size: 920mm(W) x 680mm(D) x 800mm(H)

Chrome Steel X-2 Trolley
Model: X2T-506/Chrome
Size: 670mm(W) x 600mm(D) x 1050mm(H)

Powder Coating Soiled Linen Trolley
Model: SLT-507/EX(GR)
Size: 930mm(W) x 560mm(D) x 900mm(H)

Powder Coating Dirty Linen Trolley
Model: DLT-508/EX(GR)
Size: 970mm(W) x 590mm(D) x 950mm(H)

Stainless Steel X-2 Trolley
Model: SLT-511/SS
Size: 800mm(W) x 520mm(D) x 880mm(H)

Plastic X-2 LaundryTrolley
Model : X2T-515/P
Size : 710mm(W) x 660mm(D) x 950mm(H)

Fiberglass Laundry Trolley
*Come with 100mm(Dia) Rubber Wheels
Model: FGLT-512/FG
Size: 980mm(W) x 680mm(D) x 840mm(H)
Model: FGLT-514/FG
Size: 960mm(W) x 745mm(D) x 780mm(H)

Fiberglass Laundry Trolley With Handle
*Come with 100mm(Dia) Rubber Wheels
Model: FGLT-513/FG
Size: 1500mm(W) x 810mm(D) x 795mm(H)

PE Laundry Trolley
* Come with 100mm (Dia) Rubber Wheels
Model: PELT-516/PE
Size : 1000mm(W) x 700mm(D) x 830mm(H)

T: 07 3559169 M: 016 7233169 E: tonemaxs@hotmail.com

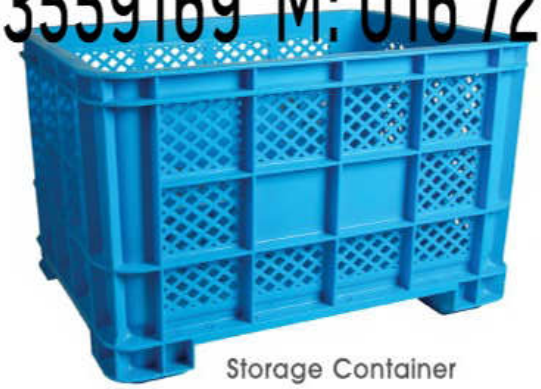

Storage Container
Model: SC-1011
Size: 1100mm(W) x 800mm(D) x 690mm(H)
Capacity: 405 Litres
Stacking: 660mm

Laundry Trolley
Model: LT-1012
Size: 1100mm(W) x 800mm(D) x 785mm(H)
Capacity: 405 Litres
Stacking: 660mm

Storage Container
Model: SC-1013
Size: 1100mm(W) x 800mm(D) x 690mm(H)
Capacity: 405 Litres
Stacking: 660mm

Laundry Trolley
Model: LT-1014
Size: 1100mm(W) x 800mm(D) x 785mm(H)
Capacity: 405 Litres
Stacking: 660mm

PE Platform Trolley
- Model: PEPT-1004/150 (Small)
  Size: 500mm(W) x 700mm(D) x 730mm(H)
  Capacity: 150kg
- Model: PEPT-1005/300 (Large)
  Size: 600mm(W) x 900mm(D) x 860mm(H)
  Capacity: 300kg
- Model: PEPT-1006/450 (Extra Large)
  Size: 700mm(W) x 1100mm(D) x 910mm(H)
  Capacity: 450kg

PE Puzzle Trolley
Model: PE-PUZZLE-1007/150
Size: 400mm(W) x 600mm(D)
Capacity: 150kg
* You can joint quantity of the trolley as you like.

T: 07 3559169 M: 016 7233169 E: tonemaxs@hotmail.com

Stainless Steel 2 Tiers Trolley c/w Hanging Bin
Model: 2TT-1107/SS
Size: 800mm(W) x 500mm(D) x 860mm(H)

Stainless Steel 3 Tiers Trolley c/w Hanging Bin
Model: 3TT-1108/SS
Size: 800mm(W) x 500mm(D) x 860mm(H)

Stainless Steel 2 Tiers Trolley
Model: 2TT-1104/SS
Size: 800mm(W) x 500mm(D) x 860mm(H)

Stainless Steel 3 Tiers Trolley
Model: 3TT-1102/SS
Size: 800mm(W) x 500mm(D) x 860mm(H)

3 Tiers Utilities Cart
- Model: 3UC-603 (Small)
  Size: 845mm(W) x 430mm(D) x 950mm(H)
- Model: 3UC-601 (Large)
  Size: 1020mm(W) x 500mm(D) x 960mm(H)

Option: Tableware Collection Tray

3 Tiers Utilities Cart c/w Buckets
- Model: 3UC-604 (Small)
  Size: 1090mm(W) x 430mm(D) x 950mm(H)

Note : Collection Tray Not Included

- Model: 3UC-602 (Large)
  Size: 1300mm(W) x 500mm(D) x 960mm(H)

Note : Collection Tray Not Included
Option: Tableware Collection Tray

3 Tiers Utilities Cart c/w Bucket
Model: 3UC-606
Note : Collection Tray Not Included
Size: 1395mm(W) x 525mm(D) x 940mm(H)
Option: Tableware Collection Tray

3 Tiers Utilities Cart c/w 3 Side Cover and Bucket
Model: 3UC-612
Size: 1395mm(W) x 525mm(D) x 940mm(H)
Option: Tableware Collection Tray

Restaurant Cart
Model: RC-308
Size: 850mm(W) x 430mm(D) x 960mm(H)

Stainless Steel Platform Trolley c/w Foldable Handle and 127mm Dia Non Marking Wheels
Model: LD-PFT-1003/SS
Size: 900mm(W) x 610mm(D) x 960mm(H)

Stainless Steel Platform Trolley
Model: PFT-1002/SS
Size: 800mm(W) x 600mm(D) x 860mm(H)

PE-2 Tiers Trolley
Model: PE-2T-1008/300
Size: 600mm(W) x 900mm(D) x 1000mm(H)
Capacity: 300kg

PE-2 Tiers Trolley
Model: PE-2T-1009/150
Size: 500mm(W) x 700mm(D) x 940mm(H)
Capacity: 150kg

PE + Powder Coating Basket Trolley
Model: PE-BASKET-1010/300
Size: 600mm(W) x 900mm(D) x 860mm(H)
Capacity: 300kg

T: 07 3559169 M: 016 7233169 E: tonemaxs@hotmail.com

Reinforced Double U Steel Bar to strengthen platform solidness

Platform Trolley without Handle

- Model: MT-1015
  Size: 480mm(W) x 740mm(D) x 145mm(H)
  Capacity: 200kg
  Castor : 100mm(Dia) Grey TPR wheel
  2 swivel & 2 rigid
- Model: MT-1016
  Size: 590mm(W) x 890mm(D) x 180mm(H)
  Capacity: 300kg
  Castor : 125mm(Dia) Grey TPR wheel
  2 swivel & 2 rigid

Fixed Handle Platform Trolley

- Model: MT-1017
  Size: 480mm(W) x 740mm(D) x 845mm(H)
  Capacity: 200kg
  Castor : 100mm(Dia) Grey TPR wheel
  2 swivel & 2 rigid
- Model: MT-1018
  Size: 590mm(W) x 890mm(D) x 840mm(H)
  Capacity: 300kg
  Castor : 125mm(Dia) Grey TPR wheel
  2 swivel & 2 rigid

Foldable Platform Trolley

- Model: MT-1019
  Size: 480mm(W) x 740mm(D) x 845mm(H)
  Capacity: 200kg
  Castor : 100mm(Dia) Grey TPR wheel
  2 swivel & 2 rigid
- Model: MT-1020
  Size: 590mm(W) x 890mm(D) x 840mm(H)
  Capacity: 300kg
  Castor : 125mm(Dia) Grey TPR wheel
  2 swivel & 2 rigid

2 Shelf 1 Handle Trolley

- Model: MT-1021
  Size: 480mm(W) x 740mm(D) x 895mm(H)
  Capacity: 200kg
  Castor : 100mm(Dia) Grey TPR wheel
  2 swivel & 2 rigid
- Model: MT-1022
  Size: 590mm(W) x 890mm(D) x 945mm(H)
  Capacity: 300kg
  Castor : 125mm(Dia) Grey TPR wheel
  2 swivel & 2 rigid

2 Shelf 2 Handle Trolley

- Model: MT-1023
  Size: 480mm(W) x 740mm(D) x 895mm(H)
  Capacity: 200kg
  Castor : 100mm(Dia) Grey TPR wheel
  2 swivel & 2 rigid
- Model: MT-1024
  Size: 590mm(W) x 890mm(D) x 945mm(H)
  Capacity: 300kg
  Castor : 125mm(Dia) Grey TPR wheel
  2 swivel & 2 rigid

3 Shelf 1 Handle Trolley

- Model: MT-1025
  Size: 480mm(W) x 740mm(D) x 905mm(H)
  Capacity: 200kg
  Castor : 100mm(Dia) Grey TPR wheel
  2 swivel & 2 rigid
- Model: MT-1026
  Size: 590mm(W) x 890mm(D) x 965mm(H)
  Capacity: 300kg
  Castor : 125mm(Dia) Grey TPR wheel
  2 swivel & 2 rigid

METAL TROLLEYS

T: 07 3559169 M: 016 7233169 E: tonemaxs@hotmail.com

3 Shelf 2 Handle Trolley

- Model: MT-1027
  Size: 480mm(W) x 740mm(D) x 905mm(H)
  Capacity: 200kg
  Castor : 100mm(Dia) Grey TPR wheel
  2 swivel & 2 rigid
- Model: MT-1028
  Size: 590mm(W) x 890mm(D) x 965mm(H)
  Capacity: 300kg
  Castor : 125mm(Dia) Grey TPR wheel
  2 swivel & 2 rigid

2 Shelf Trolley with Ledge

- Model: MT-1029
  Size: 480mm(W) x 740mm(D) x 895mm(H)
  Capacity: 200kg
  Castor : 100mm(Dia) Grey TPR wheel
  2 swivel & 2 rigid
- Model: MT-1030
  Size: 590mm(W) x 890mm(D) x 945mm(H)
  Capacity: 300kg
  Castor : 125mm(Dia) Grey TPR wheel
  2 swivel & 2 rigid

3 Shelf Trolley with Ledge

- Model: MT-1031
  Size: 480mm(W) x 740mm(D) x 905mm(H)
  Capacity: 200kg
  Castor : 100mm(Dia) Grey TPR wheel
  2 swivel & 2 rigid
- Model: MT-1032
  Size: 590mm(W) x 890mm(D) x 965mm(H)
  Capacity: 300kg
  Castor : 125mm(Dia) Grey TPR wheel
  2 swivel & 2 rigid

Full Iron Net Trolley

- Model: MT-1033
  Size: 480mm(W) x 740mm(D) x 850mm(H)
  Capacity: 200kg
  Castor : 100mm(Dia) Grey TPR wheel
  2 swivel & 2 rigid
- Model: MT-1034
  Size: 590mm(W) x 890mm(D) x 920mm(H)
  Capacity: 300kg
  Castor : 125mm(Dia) Grey TPR wheel
  2 swivel & 2 rigid

2 Shelf Trolley with Iron Net

- Model: MT-1035
  Size: 480mm(W) x 740mm(D) x 1050mm(H)
  Capacity: 200kg
  Castor : 100mm(Dia) Grey TPR wheel
  2 swivel & 2 rigid
- Model: MT-1036
  Size: 590mm(W) x 890mm(D) x 1100mm(H)
  Capacity: 300kg
  Castor : 125mm(Dia) Grey TPR wheel
  2 swivel & 2 rigid

2 Shelf Trolley with Cage

- Model: MT-1037
  Size: 480mm(W) x 740mm(D) x 895mm(H)
  Capacity: 200kg
  Castor : 100mm(Dia) Grey TPR wheel
  2 swivel & 2 rigid
- Model: MT-1038
  Size: 590mm(W) x 890mm(D) x 945mm(H)
  Capacity: 300kg
  Castor : 125mm(Dia) Grey TPR wheel
  2 swivel & 2 rigid

T: 07 3559169 M: 016 7233169 E: tonemaxs@hotmail.com

1 Fixed Handle Platform Trolley
- Model: MT-1039
  Size: 770mm(W) x 1235mm(D) x 815mm(H)
  Capacity: 400kg
  Castor : 150mm(Dia) Grey TPR wheel
  2 swivel & 2 rigid
- Model: MT-1040
  Size: 770mm(W) x 1235mm(D) x 850mm(H)
  Capacity: 500kg
  Castor : 200mm(Dia) Grey TPR wheel
  2 swivel & 2 rigid

2 Fixed Handle Platform Trolley
- Model: MT-1041
  Size: 770mm(W) x 1235mm(D) x 815mm(H)
  Capacity: 400kg
  Castor : 150mm(Dia) Grey TPR wheel
  2 swivel & 2 rigid
- Model: MT-1042
  Size: 770mm(W) x 1235mm(D) x 850mm(H)
  Capacity: 500kg
  Castor : 200mm(Dia) Grey TPR wheel
  2 swivel & 2 rigid

Foldable Handle Platform Trolley
- Model: MT-1043
  Size: 770mm(W) x 1235mm(D) x 815mm(H)
  Capacity: 400kg
  Castor : 150mm(Dia) Grey TPR wheel
  2 swivel & 2 rigid
- Model: MT-1044
  Size: 770mm(W) x 1235mm(D) x 875mm(H)
  Capacity: 500kg
  Castor : 200mm(Dia) Grey TPR wheel
  2 swivel & 2 rigid

Full Iron Net Trolley
- Model: MT-1045
  Size: 770mm(W) x 1235mm(D) x 970mm(H)
  Capacity: 400kg
  Castor : 150mm(Dia) Grey TPR wheel
  2 swivel & 2 rigid
- Model: MT-1046
  Size: 770mm(W) x 1235mm(D) x 1030mm(H)
  Capacity: 500kg
  Castor : 200mm(Dia) Grey TPR wheel
  2 swivel & 2 rigid

Platform Trolley with Side Rail
- Model: MT-1047
  Size: 770mm(W) x 1235mm(D) x 845mm(H)
  Capacity: 400kg
  Castor : 150mm(Dia) Grey TPR wheel
  2 swivel & 2 rigid
- Model: MT-1048
  Size: 770mm(W) x 1235mm(D) x 905mm(H)
  Capacity: 500kg
  Castor : 200mm(Dia) Grey TPR wheel
  2 swivel & 2 rigid

Platform Trolley with End Cage
- Model: MT-1049
  Size: 770mm(W) x 1235mm(D) x 1270mm(H)
  Capacity: 400kg
  Castor : 150mm(Dia) Grey TPR wheel
  2 swivel & 2 rigid
- Model: MT-1050
  Size: 770mm(W) x 1235mm(D) x 1330mm(H)
  Capacity: 500kg
  Castor : 200mm(Dia) Grey TPR wheel
  2 swivel & 2 rigid

Powder Coating Work Tainer
Model: PCWT-1051
Size: 790mm(W) x 1080mm(D) x 1725mm(H)
Capacity : 500kg
Castor : 150mm(Dia) Press Rubber
2 swivel & 2 side Brake

Powder Coating Work Tainer with Swinging Door
Model: PCWT-1052
Size: 790mm(W) x 1080mm(D) x 1725mm(H)
Capacity : 500kg
Castor : 150mm(Dia) Press Rubber
2 swivel & 2 side Brake

T: 07 3559169 M: 016 7233169 E: tonemaxs@hotmail.com

Technical Specification	A	B	C	D
Model	RC-3TT -1103/SS	RC-3TT -1105/SS	RC-4TT -1106/SS	RC-4TT -1107/SS
Number of plastic container (pcs)	3	3	4	4
Number of edge handling bin (pcs)	1	1	1	1
Product Dimension (L x W x H)	730 x 420 x 980	810 x 470 x 1020	730 x 420 x 1250	810 x 470 x 1250
Each container capacity, litres	25	40	25	40
Edge handling bin capacity, litres	20	20	20	20
Wheel diameter, mm	75	75	75	75
Product weight, kg	8.4	10.0	10.4	13.0
Material				
Frame work	Stainless steel	Stainless steel	Stainless steel	Stainless steel
Plastic container	Plastic	Plastic	Plastic	Plastic
Edge handling bin	Plastic	Plastic	Plastic	Plastic
Packaging dimension				
Frame work (L x W x H)	867 x 530 x 85	920 x 617 x 85	1140 x 530 x 85	1140 x 617 x 85
Plastic container / Edge handling bin	523 x 308 x 377	605 x 312 x 440	523 x 352 x 377	605 x 357 x 440
Packaging volume				
Frame work (m^3)	0.04	0.05	0.05	0.06
Plastic container / Edge handling bin (m^3)	0.066	0.08	0.07	0.10

Technical specifications and features may change without prior notice.

Knock Down (DIY)

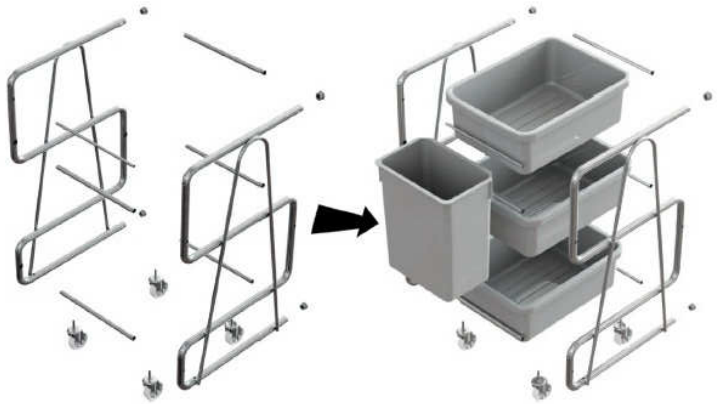

T: 07 3559169 M: 016 7233169 E: tonemaxs@hotmail.com

Single Wringer Bucket (Side Press)

- Model: SWB-386(YE)
  Size: 455mm(W) x 370mm(D) x 1010mm(H)
- Model: SWB-386(BL)
  Size: 455mm(W) x 370mm(D) x 1010mm(H)

Single Wringer Bucket (Down Press)

- Model: SWB-387(YE)
  Size: 640mm(W) x 380mm(D) x 800mm(H)
- Model: SWB-387(BL)
  Size: 640mm(W) x 380mm(D) x 800mm(H)

Single Wringer Bucket (Side Press)
Model: SWB-347
Size: 430mm(W) x 280mm(D) x 465mm(H)

Single Wringer Bucket c/w Extra Bucket Below Wringer
Model: SWB-312
Size: 630mm(W) x 480mm(D) x 790mm(H)

Single Wringer Bucket c/w Trolley & Basket (Down Press)
Model: SBT-349
Size: 340mm(W) x 460mm(D) x 945mm(H)

Double Bucket c/w Chrome Steel Frame (Down Press)
Model: DBMF-344
Size: 860mm(W) x 415mm(D) x 830mm(H)

Double Bucket c/w Plastic Frame (Down Press)
Model: DBPF-343
Size: 700mm(W) x 445mm(D) x 980(H)

Single Wringer Bucket c/w Trolley + Tool Container + Extra Bucket Below Wringer
Model: SWB-313
Size: 920mm(W) x 515mm(D) x 930mm(H)

Janitor Cart c/w Cover
Model: JC-309
Size: 1130mm(W) x 515mm(D) x 980mm(H)

Janitor Cart c/w Cover
Model: JC-314
Size: 1300mm(W) x 550mm(D) x 1000mm(H)

Janitor Cart c/w Wringer Bucket
Model: JC-315
Size: 1300mm(W) x 550mm(D) x 1000mm(H)

Multifunction Janitor Cart
Model: JC-310
Size: 1260mm(W) x 740mm(D) x 1105mm(H)

Multifunction Janitor Cart
Model: JC-311
Size: 1190mm(W) x 515mm(D) x 1120mm(H)

Dust Control Mop

Frame for Dust Control Mop

40cm Model: DCMF(Frame)40
60cm Model: DCMF(Frame)60
80cm Model: DCMF(Frame)80
100cm Model: DCMF(Frame)100

B.Cotton Dust Mop (Refill)

40cm(W) Model: DMR 820
60cm(W) Model: DMR 821
80cm(W) Model: DMR 822
100cm(W) Model: DMR 823

Microfiber Dust Mop (Refill)

Microfibre Yarn Loop End

40cm(W) Model: MDMR 824
60cm(W) Model: MDMR 825
80cm(W) Model: MDMR 826
100cm(W) Model: MDMR 827

Acrylic Dust Mop (Refill)

40cm(W) Model: ADMR 828
60cm(W) Model: ADMR 829
80cm(W) Model: ADMR 830
100cm(W) Model: ADMR 831

Ceiling & Wall Mop

A. Ceiling & Wall Mop (Holder) Model: CWM 814
B. Ceiling & Wall Mop (Refill) Model: CWM 815
C. Ceiling & Wall (Full Set) Model: CWM 816

Lamb Wool Set

A. Lambs Wool (Holder) Model: LWH 808
B. Lambs Wool (Refill) Model: LWR 809
C. Lambs Wool (Full Set) Model: LWS 810

Blended Kentucky Mop with Strips

A. Clip for Kentucky Mop Model: Kentucky Clip 811
B. Kentucky Mop (Refill) Model: Kentucky Refill 812
C. Kentucky (Full Set) Model: Kentucky Set 813

Window Washer Bucket

Model: WWB-546
Size: 510mm(W) x 270mm(D) x 340mm(H)

Tableware Collection Tray

Top Size: 535mm(D) x 380mm(W)
Bottom Size: 450mm(D) x 315mm(W)
Height: 150mm

Tools Container

Model: TC-605
Size: 385mm(W) x 335mm(D) x 170mm(H)

S/S Window Scraper

Model: SSWS-4

Window Squeegee Rubber

(D.I.Y) cut it yourself
Model: WSR 42
Size: 1050mm(W)

Window Squeegee

Model: WS 14

Clamp

Bright Solution Stainless Steel Treatment Solution

Removes free iron and other contaminants from stainless steel surface
Capacity: 220ml / 500ml

3M Stainless Steel Cleaner & Polish

Cleaner for stainless steel, chrome, aluminium and metal surfaces
Capacity: 600g

1)3M Heavy Duty Thick Scrub Pad 9650
Size: 76mm(W) x 115mm(D)
2)3M Light Duty Thick Scrub Pad 9030
Size: 89mm(W) x 127mm(D)

Doodlebug Scrub n Strip Pad 8541

Size: 117mm(W) x 254mm(D)

3M Floor Pad 16" 18" 20"

Stripping/Scrubbing/Polishing/ Buffing/Burnishing

Window Cleaning Kit

Model: Crystal Set

Floor Squeegee (Rubber)

FS 17
Size : 24" / 30"

Floor Squeegee (Form)

FS 18
Size : 22" / 30"

Self Closing Lobby Dustpan

SCLD-15
Size : 315mm(W) x 290mm(D) x 950mm(H)

Pick Up Reacher

Model : PUR-16
Size : 140mm(L) x 130mm(D) x 880mm(H)

GENESIS OFFICE SUPPLY SDN BHD
T: 07 3559169 M: 016 7233169 E: tonemaxs@hotmail.com

Full Colour Blended Circular Mop

350gms (G.WT) with oval shape socket model:FCCM-804

red

yellow

green

Blended Circular Mop

300gms (G.WT) with oval shape socket model:BCM-807

red

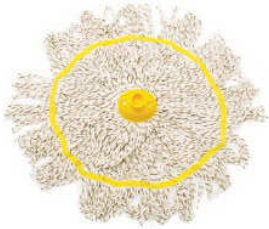

yellow

green

blue

Full Colour Round Mop

330gms (G.WT) with oval shape socket model:FCRM-803

red

orange

yellow

green

blue

white

Semi Colour Round Mop

330gms (G.WT) with oval shape socket model:SCRM-805

white+blue

white+red

white+green

white+yellow

T: 07 3559169 M: 016 7233169 E: tonemaxs@hotmail.com

Dust Mop Pad

40cm x 12cm - DMP 7006
60cm x 12cm - DMP 7007
80cm x 12cm - DMP 7008
100cm x 12cm - DMP 7009

- Thicker pads fit with standard dust mop frames.
- 4 different color strip tape allows quick identification by usage or areas and reduce cross-transmission.
- Removes up to 80% more dust and dirt than traditional cotton dust mops.

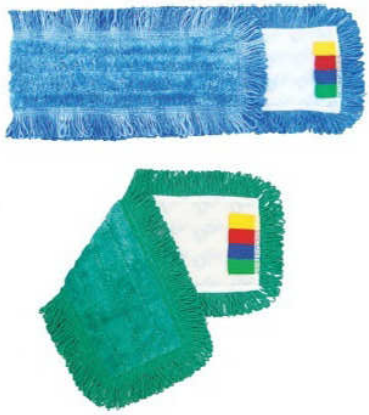

Fringed Dust Mop Pad

40cm x 13cm - FDMP 7001
60cm x 13cm - FDMP 7002
80cm x 13cm - FDMP 7003
95cm x 13cm - FDMP 7004
100cm x 13cm - FDMP 7005

- Pads fit with standard adapter & dust mop frames or pads fit with standard aluminium adapter only.
- 4 different color strip allows quick identification by usage or areas and reduce cross-transmission.
- Fringed dust mop provide 50% more surface area than non-fringed mops for faster cleaning.

Dust Mop Adapter

40cm x 14cm - DMA 7101
60cm x 14cm - DMA 7102
80cm x 14cm - DMA 7103
100cm x 14cm - DMA 7104

- Adapter fit with standard dust mop frames.

Dust Mop Frames

40cm x 9cm - DCMF(Frame) 40
60cm x 9cm - DCMF(Frame) 60
80cm x 9cm - DCMF(Frame) 80
100cm x 9cm - DCMF(Frame) 100

- Maneuverability at its best.
- The swivel handle swings at all angles providing you with a versatile, efficient dust control tool.
- The zinc coating will not chip, crack, rust or peel.

Flexible Dusting Wand

65cm x 6cm - FDW 7061

- Bend wand to any shape.
- Excellent for cleaning hard-to-reach areas.
- Attach to all quick-connect handle.

Microfiber Flexible Sleeve

46cm x 10cm - MFS 7062

- Pick up dust and debris.
- For dry use only.
- Bend wand any shape.
- Excellent for cleaning hard-to-reach areas.
- Attach to all quick-connect handle.

T: 07 3559169 M: 016 7233169 E: tonemaxs@hotmail.com

Wet Mop Microfiber Pad

48cm x 13cm - WMP 7013
64cm x 13cm - WMP 7014

- 4 different color strip tape allows quick identification by usage or areas and reduce cross-transmission
- High quality woven microfiber pads offer more cleaning power than ordinary cotton or rayon that allow the fibers to trap and hold dirt.

Wet Mop Microfiber Scrubber Pad

48cm x 13cm - WMSP 7011
64cm x 13cm - WMSP 7012

- Provides extra scrubbing strength and work well with slate, stone and uneven tile.
- 4 different color strip tape allows quick identification by usage or areas and reduce cross-transmission
- Scratch-resistant scrubber flat for removing stubborn stain.

Wet Mop Plastic Adapter

44cm x 11cm - WMPA 7021
60cm x 11cm - WMPA 7022

Dust Mop Aluminium Adapter

91cm x 9.5cm - DMAA 7041

- Mop head swivels with ease around corners and large objects.
- Works well in both dry and wet environments.
- Leave no residue and attract dirt and grime to their powerful microfibers.

Aluminium Handle c/w Screw Head 4 Feet Length

AH 4FT

Aluminium Handle c/w Screw Head 5 Feet Length

AH 5FT

Aluminium Telescopic Extension Pole 2 Extension

ATEP-849 2 x 1.2 meter ATEP-851 2 x 2.25 meter
ATEP-850 2 x 1.5 meter

Aluminium Telescopic Extension Pole 3 Extension

ATEP-853 3 x 1.5 meter ATEP-855 3 x 2.0 meter
ATEP-854 3 x 3.0 meter

T: 07 3559169 M: 016 7233169 E: tonemaxs@hotmail.com

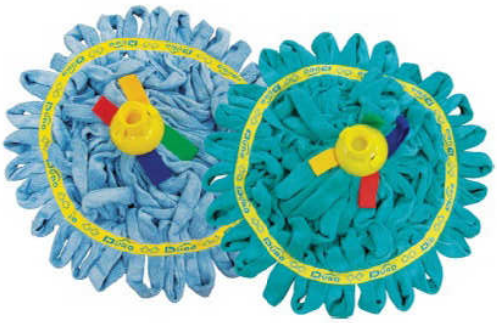

Microfiber Round Mop

200gram - MRM 7033

- Makes wet mopping more efficient and effective.
- 4 different color strip tape allows quick identification by usage or areas and reduce cross-transmission
- High quality woven microfiber pads offer more cleaning power than ordinary cotton or rayon that allow the fibers to trap and hold dirt.

Microfiber Strip Round Mop

200gram - MSRM 7034

- Makes wet mopping more efficient and effective.
- 4 different color strip tape allows quick identification by usage or areas and reduce cross-transmission
- High quality woven microfiber pads offer more cleaning power than ordinary cotton or rayon that allow the fibers to trap and hold dirt.

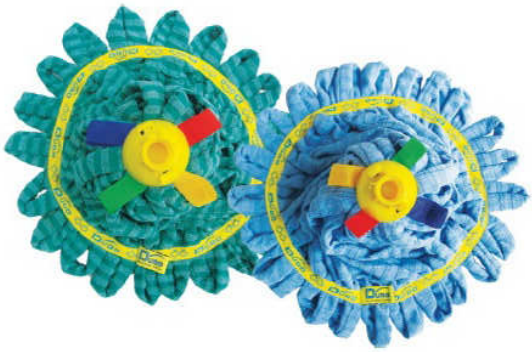

Microfiber Tube Mop

270gram - MTM 7031

- Extended life: Triple the durability of standard blend mops. Lasts 600 launderings.
- Improved Productivity and Safety: Tube design reduces drag for improved user comfort.
- Improved Scrubbing Power: Extra aggressive and highly durable PVC mesh headband allows for faster and easier scrubbing of marred floors for improved productivity and cleaning performance.

Microfiber Strip Tube Mop

270gram - MSTM 7032

- Extended life: Triple the durability of standard blend mops.
- Improved Productivity and Safety: Tube design reduces drag for improved user comfort.
- Improved Scrubbing Power: Extra aggressive and highly durable PVC mesh headband allows for faster and easier scrubbing of marred floors for improved productivity and cleaning performance.

T: 07 3659169 M: 016 7233169 E: tonemaxs@hotmail.com

Tube Clip

TC 7072

- Attaches to all microfiber tube mop easily.

Double Side Microfiber Scrub Pad

14cm x 10cm - DSSP 7081

- One side is fitted designed for heavy duty scrubbing tasks.
- High quality woven microfiber pads offer more cleaning power than ordinary cotton or rayon that allow the fibers to trap and hold dirt.

Microfiber Cleaning Cloth

40cm x 40cm - CC 7091

- Cleans without chemicals.
- Extra Strong & durable up to 600 launderings.
- Super absorbent.
- Extra soft & gentle.
- Non scratch & streak free.
- Machine Washable.

Advanced Microfiber Technology Glass Cleaning Cloth

40cm x 40cm - GCC 7092

- Cleans, shine & polish without chemicals.
- Extra Strong & durable up to 600 launderings.
- Ultra absorbent.
- Extra soft & gentle.
- Non scratch & streak free.
- Machine Washable.
- Smooth Surface.

Window Washer Sleeve With Scrub Trap

38cm x 7cm - WWSS 7052

- Comes complete with a built in scrub trap to remove stubborn stain microfiber sleeve cover.
- For wet use only.
- Excellent for windows cleaning.
- Attaches to all quick-connect handles.

Window T-Bar With Hand Grip

35cm x 16cm - T-Bar 7071

- Handle with Rubber Grip For Non Slip

Window Washer Sleeve

38cm x 7cm - WWS 7051

- Pick up dust and debris.
- Excellent for windows cleaning.
- Attaches to all quick-connect handles.

Press Wringer Bucket

61cm(W) x 35.5cm(D) x 40cm(H) - PWB 7073

- Unique, ribbed "washboard" surface removes dirt and debris from mops before wringing.
- Use when flood cleaning or heavier liquid lay-d down is desired.
- Press sleeve provides easy, "no-touch" wringing.
- For use with microfiber wet mops up to 56cm in length.
- Non-marking casters.

GENESIS OFFICE SUPPLY SDN BHD

T: 07 3559169 M: 016 7233169 E: tonemaxs@hotmail.com

DURO STAINRID®
WITH ENZYME FORMULA

Superior
Removes almost all stains including food stains on plates and utensils, ink on clothes, watermarks on vehicle bodies.

Simple
Spot cleaning on stain and soaking if required, followed by rinsing. Use hot water to accelerate stain removal.

Safe
Can be used directly and safe enough for those with sensitive skin.

WHY DURO STAINRID??

- *Duro StainRid removes both tough and light stains with minimal fuss;*
- *It is soft on the skin yet hard on the stains;*
- *This is due to its unique formulation which uses only the highest quality ingredients;*
- *Duro StainRid can be used for both residential and commercial laundry too.*
- *Duro Stainrid uses 30% less water and electricity consumption compared to other*

DURO STAINRID REMOVES THE FOLLOWING EASILY!!

- *Food based stains*
- *Petroleum based stains*
- *Animal dung or human faeces*
- *Surface stains*
- *Laundry dirt*
- *Stubborn watermarks on vehicles' surfaces*

TARGET MARKETS

- *Restaurants & Food Courts*
- *Catering Companies*
- *Vehicle Workshops*
- *Car Wash Operators*
- *Petrol Stations*
- *Hotels and Hostels*
- *Laundry Operators*
- *Hospitals*
- *Households*

GENESIS OFFICE SUPPLY SDN BHD

T: 07 3559169 M: 016 7233169 E: tonemaxs@hotmail.com

Code : DURO 930
Power Pine Gel
- Pine Disinfectant Gel
Pack Size : 10 Litres / 20 Litres

Usage :
Pine disinfectant gel
Kill 99.9% many common harmful germs
Excellent in removing soils & neutralizes-unpleasant odors

Code : DURO 931
Antibacterial Foam Soap
- Drakka, Lux, Baby Powder, Lavender, Apple
Pack Size : 10 Litres / 20 Litres

Usage :
Remove dirt and gentle to hand
Mouisturizing and leave pleasant scent

Code : DURO 932
E-CHG (Fly Repellent)
Pack Size : 10 Litres / 20 Litres

Usage :
Effective against fly and other flying insect

Code : DURO 933
Insect Repellent
Pack Size : 10 Litres / 20 Litres

Usage :
Effective against crawling insect

Code : DURO 934
Tyre Bright
Pack Size : 10 Litres / 20 Litres

Usage :
Clean and restore tyre shine

Code : DURO 935
Wipe & Shine Car Cleaner
Pack Size : 10 Litres / 20 Litres

Usage :
Suitabe to use anywhere, anytime - without water!
Combines a solution that cleans polishes and protects, to save your time
Creates a finish without streaks, scratches or water spots

Code : DURO 936
Snow Car Wash
Pack Size : 10 Litres / 20 Litres

Usage :
Mild, deep cleaning, rich suds remove dirt and grime
Streak free shine cleaning

Code : DURO 937
Sanitary Bin Liquid
- Strawberry
Pack Size : 10 Litres / 20 Litres

Usage :
Cleaning and deodorizing with fresh strawberry fragrance
Suitable for all types sanitary bin

Code : DURO 938
Urinal Sanitary Refill
- Strawberry
Pack Size : 10 Litres / 20 Litres

Usage :
Disinfects and prevents staining of the urinal
Cleaning and deodorising

Code : DURO 939
Toilet Seat Sanitizer
- Lime
Pack Size : 10 Litres / 20 Litres

Usage :
Prevent the spread of germs
Keep surface clean

GENESIS OFFICE SUPPLY SDN BHD

T: 07 3559169 M: 016 7233169 E: tonemaxs@hotmail.com

CLEANING CHEMICAL

Code : DURO 940
Hand Wash
- Lemon, Aloe Vera
Pack Size : 10 Litres / 20 Litres

Usage :
Cleanse and moisturizes your hands
Mild and gentle to hands
A pleasant and refreshing scent after wash

Code : DURO 941
3 in 1 Shower Creme
- Citrus
Pack Size : 10 Litres / 20 Litres

Usage :
Formulated to be used as body wash and hair shampoo
Mild and gentle to skin and hair
Pleasant and refreshing scent after every shower

Code : DURO 942
Hand Sanitizing Liquid
- Aloe Vera
Pack Size : 10 Litres / 20 Litres

Usage :
Fast-acting formula to kill 99.9% of many common harmful germs
No water required and fast drying
Leave hands feeling clean and fresh

Code : DURO 943
Dish Washer Cleaner
-Lemon
Pack Size : 10 Litres / 20 Litres

Usage :
Long lasting suds and cuts offensive / fishy smell
Remove tough grease stains while gentle to hands
Easy rinsing and fast drain dry
Free from phosphate

Code : DURO 944
Heavy Duty Degreaser
Pack Size : 10 Litres / 20 Litres

Usage :
Remove tough stains effectively
Quick drying and no watermark

Code : DURO 945
Multi Purpose Cleaner
(High Viscosity)
Pack Size : 10 Litres / 20 Litres

Usage :
Versatile cleaner effective for all kind of hard surface such as all type of floors, tiled walls, bath room surface, windows, kitchen surfaces, etc...
Safe for crawling toddlers and infants

Code : DURO 946
Toilet Bowl Cleaner
- Lemon
Pack Size : 10 Litres / 20 Litres

Usage :
Remove stubborn stains and eliminate limescale
Disinfect and deodorize
Kills 99.9% of viruses & bacteria

Code : DURO 947
Glass Cleaner
Pack Size : 10 Litres / 20 Litres

Usage :
Remove dirt, spots,spills and marks on glass
Quick drying and stain free
Give a streak-free shine
Anti-Fog features

Code : DURO 948
Air Freshener
- Floral
Pack Size : 10 Litres / 20 Litres

Usage :
Long lasting flower fragrance
Helps eliminate foul odors
Leaving area smelling fresh and clean
Environment friendly products

GENESIS OFFICE SUPPLY SDN BHD

T: 07 3659169 M: 016 7233169 E: tonemaxs@hotmail.com

Product Description		Packaging	
Product Code	Product Size	Pcs / Roll	Rolls / Ctns
S Size 20 lts (White)	450mm x 540mm	50 pcs	100
S Size 20 lts (Black)	450mm x 540mm	50 pcs	100
40 lts (Blue)	560mm x 850mm	20 pcs	50
70 lts (Blue)	660mm x 990mm	20 pcs	50
M Size 100 lts (Black)	760mm x 1000mm	10 pcs	50
M Size 100 lts (Clear,Green,Blue,White,Yellow)	760mm x 1000mm	10 pcs	50
L Size 150 lts (Black)	900mm x 1200mm	10 pcs	50
L Size 150 lts (Clear,Green,Blue,White,Yellow)	900mm x 1200mm	10 pcs	50
XL Size 180 lts (Black)	1120mm x 1250mm	10 pcs	50
XL Size 180 lts (Clear)	1120mm x 1250mm	10 pcs	50

TRADITION SQUARE GARBAGE BAG

Product Description		Packaging	
Product Code	Product Size	Pcs / Pkt	Pkt / Resin Bags
20 lts Blue	470mm x 550mm	60 pcs	100
50 lts Black	560mm x 840mm	30 pcs	120
70 lts Black	740mm x 900mm	20 pcs	100
100 lts Black	760mm x 990mm	10 pcs	80
150 lts Black	915mm x 1220mm	50 pcs	10

T: 07 3559169 M: 016 7233169 E: tonemaxs@hotmail.com

OZONE

MODEL	Hudson 28	Hudson 42
OZONE OUTPUT (Approximate)	1800 mg/hour	3200 mg/hour
Chassis	Stainless Steel with Build-In Blower	
Application	Portable or Wall Mounted	
Light Bulb	14watt Germicidal Lamp x 2 tube (Import from USA)	21watt Germicidal Lamp x 2 tube (Import from USA)

FEATURES AND BENEFITS

- Ideal use for smoking areas, hotel housekeeping, banquet halls, supermarkets, storage areas.
- Kill germs, bacteria, microbes, virus and airborne pollutants.
- Very effective against smoke residual.
- Eliminates pungent smells.
- Ozone output sterilizes the entire area of coverage including surface and air.
- Safe, easy-to-use, and low maintenance.
- Extended warranty.
- Build in air blower.

MODEL	Micah 10	Micah 14
OZONE OUTPUT (Approximate)	600 mg/hour	900 mg/hour
Chassis	Stainless Steel	
Application	Portable or Wall Mounted	
Light Bulb	10watt Germicidal Lamp x 1 tube (Import from USA)	14watt Germicidal Lamp x 1 tube (Import from USA)

FEATURES AND BENEFITS

- Ideal use for smoking areas, hotel housekeeping, banquet halls, supermarkets, storage areas.
- Kill germs, bacteria, microbes, virus and airborne pollutants.
- Very effective against smoke residual.
- Eliminates pungent smells.
- Ozone output sterilizes the entire area of coverage including surface and air.
- Safe, easy-to-use, and low maintenance.
- Extended warranty.

T: 07 3559169 M: 016 7233169 E: tonemaxs@hotmail.com

Grayson 30

Dimensions (H | W | D)	24.5cm | 51cm | 9.5cm
Total Power Output	30w (15w Tubular lamp x 2)
Weight	3.6kg
Coverage	approx. 300 sqft
Glue Board Size	12cm x 43cm (1 Piece)
Features	Wall mounted or table top
	Solid metal chassis with epoxy coating
	Glue Board replacement required

FEATURES AND BENEFITS

- Powerful UV light
- Temperature optimised glue board
- Hygiene solution to capture flies
- Slim, silent, decorative and discreet flying insect trap
- Good to have for restaurants, bakeries, food processing factories, canteen, cafeteria and food court
- 2 choices of mounting - Wall mount - Table top
- HACCP Compliant
- Available in Black or White

Ascara 30

Dimensions (H | W | D)	13cm | 55cm | 13.5cm
Total Power Output	30w (15w Tubular lamp x 2)
Weight	3.2kg
Coverage	approx. 300 sqft
Glue Board Size	12cm x 43cm (1 Piece)
Features	Wall mounted
	Solid metal chassis with epoxy coating
	Glue Board replacement required

FEATURES AND BENEFITS

- Powerful UV light
- Temperature optimised glue board
- Hygiene solution to capture flies
- Slim, silent, decorative and discreet flying insect trap
- Good to have for restaurants, bakeries, food processing factories, canteen, cafeteria and food court
- 2 choices of mounting - Wall mount - Table top
- HACCP Compliant
- Available in Black or White

Temperature Optimised Sticky Glue Board

Glueboard For Model :
Grayson 30 & Ascara 30
Packaging : 12 pcs & 24pcs

Glueboard For Model :
Vanessa 40
Packaging : 12 pcs & 24pcs

Glueboard For Model :
Lexus 60
Packaging : 12 pcs & 24pcs

T: 07 3559169 M: 016 7233169 E: tonemaxs@hotmail.com

Vanessa 40

Dimensions (H | W | D)	22.7cm | 65.5cm | 7.5cm
Total Power Output	40w (20w Tubular lamp x 2)
Weight	5kg
Coverage	approx. 400 sqft
Glue Board Size	20cm x 25cm (2 Pieces)
Features	Wall mounted
	Solid metal chassis with epoxy coating
	Glue Board replacement required

FEATURES AND BENEFITS

- Powerful UV light
- Temperature optimised glue board
- Hygiene solution to capture flies
- Box chassis designed for safety-no spillage of dead flies
- Window louvers to prevent flies from escaping
- Good to have for restaurants, bakeries, food processing factories, canteen, cafeteria and food court
- 2 choices of mounting - Wall mount - Table top
- HACCP Compliant
- Available in Black or White

Lexus 60

Dimensions (H | W | D)	36.5cm | 46cm | 13.5cm
Total Power Output	60w (15w Tubular lamp x 4)
Weight	6.3kg
Coverage	approx. 600 sqft
Glue Board Size	25cm x 43cm (1 Piece)
Features	Wall mounted
	Solid metal chassis with epoxy coating
	Glue Board replacement required

FEATURES AND BENEFITS

- Powerful UV light
- Temperature optimised glue board
- Hygiene solution to capture flies
- Box chassis designed for safety-no spillage of dead flies
- Window louvers to prevent flies from escaping
- Good to have for restaurants, bakeries, food processing factories, canteen, cafeteria and food court
- HACCP Compliant

Insect Killer (ELECTRIC GRILLE)

Model: T1-2020
Size: 610mm(W) x 120mm(D) x 415mm(H)
Packed Size: 658mm(W) x 158mm(D) x 466mm(H)
Measuremant: 0.05 M_3
Est. Weight: 8.7kg
Electrical Volts: 240V 50Hz 13A
EGO Thermostat: n/a
Heater: n/a
Action Range: 12 - 15 metres
Output: 4 vac
Material: E.G (Epoxy)

T: 07 3559169 M: 016 7233169 E: tonemaxs@hotmail.com

Stackable

FB-345

FB-346

FB-347

FB-348

FB-333

FB-334

FB-335

FB-336

MODEL NO.	POWER	V / FREQ	(A) CURRENT			(RPM) SPEED			(CFM) AIR VOLUME		
	HP	ACV / Hz	H	M	L	H	M	L	H	M	L
FB-345	3/4	230 / 50	3	2.2	2.1	1420	1330	1180	1560	1460	1280
FB-346	3/4	230 / 50	3	2.2	2.1	1420	1330	1180	1560	1460	1280
FB-347	3/4	230 / 50	3	2.2	2.1	1415	1320	1280	1530	1420	1300
FB-348	3/4	230 / 50	3	2.2	2.1	1415	1320	1280	1530	1420	1300
FB-333	1/3	230 / 50	1			2850			700		
FB-334	1/3	230 / 50	1.2			2850			900		
FB-335	1	230 / 50	3			2900			2300		
FB-336	1	230 / 50	3.8			2845			3950		

T: 07 3559169 M: 016 7233169 E: tonemaxs@hotmail.com

DUCTING

BS-333 Ducting

BS-334 Ducting

BS-335 Ducting

BS-336 Ducting

MODEL NO.	LENGTH
BS-333-Ducting (200mm Dia)	5 Meter
BS-334-Ducting (200mm Dia)	4.5 Meter
BS-335-Ducting (305mm Dia)	5 Meter
BS-336-Ducting (390mm Dia)	5 Meter

T: 07 3559169 M: 016 7233169 E: tonemaxs@hotmail.com

Wet / Dry Vacuum Cleaner
(Twin Motor) c/w Stainless Steel Body
Model: SDM 70
Size: 440mm(Dia) x 980mm(H)
Power: 2000 Watt
Voltage: 220V-240V
Air Flow: 106L/s
Vacuum: 2000mmH_20
Capacity: 70 Litres

Wet / Dry Vacuum Cleaner (Twin Motor)
Model: DM 90
Size: 440mm(Dia) x 950mm(H)
Power: 2000 Watt
Voltage: 220V-240V
Air Flow: 106L/s
Vacuum: 2000mmH_20
Capacity: 90 Litres

Wet / Dry Vacuum Cleaner
c/w Stainless Steel Body
Model: SSB 15 L
Dimension: 345mm(Dia) x 620mm(H)
Power: 1000 Watt
Voltage: 220V-240V
Air Flow: 48L/s
Vacuum: 1800mmH_20
Capacity: 15 Litres

Wet / Dry Vacuum Cleaner
c/w Stainless Steel Body
Model: SSB 30 L
Dimension: 345mm(Dia) x 830mm(H)
Power: 1200 Watt
Voltage: 220V-240V
Air Flow: 53L/s
Vacuum: 2000mmH_20
Capacity: 30 Litres

Wet / Dry Vacuum Cleaner (Twin
Motor) c/w Stainless Steel Body
Model: SSB 70 L
Dimension: 440mm(Dia) x 1040mm(H)
Power: 2000 Watt
Voltage: 220V-240V
Air Flow: 106L/s
Vacuum: 2000mmH_20
Capacity: 70 Litres

Low Speed Scrubber
Model: LSS-175
Power: 1200 Watt
Voltage: 220V
RPM: 175RPM
Capacity: 48KG
Diameter: 17"

Low Speed Scrubber
Model: LSS-154
Power: 1200 Watt
Voltage: 220V
RPM: 154RPM
Capacity: 45KG
Diameter: 17"

Wet / Dry Vacuum Cleaner
Model: SM 15
Dimension: 345mm(Dia) x 520mm(H)
Power: 1000 Watt
Voltage: 220V-240V
Air Flow: 48L/s
Vacuum: 1800mmH_20
Capacity: 15 Litres

Wet / Dry Vacuum Cleaner
Model: SM 30
Dimension: 345mm(Dia) x 720MM(H)
Power: 1200 Watt
Voltage: 220V-240V
Air Flow: 53L/s
Vacuum: 2000mmH_20
Capacity: 30 Litres

T: 07 3559169 M: 016 7233169 E: tonemaxs@hotmail.com

ACCESSORIES

30L, 70, 90L
Accessories of wet/dry **vacuum**

1. Long connector
2. Suction hose
3. Short connector
4. Metal tube (Bent)
5. Wet floor nozzle
6. Dry floor nozzle
7. Crevice tool
8. Dust brush

15L
Accessories of wet/dry **vacuum**

1. Long connector
2. Suction hose
3. Short connector
4. Metal tube (Straight)
5. Wet floor nozzle
6. Dry floor nozzle
7. Crevice tool
8. Dust brush

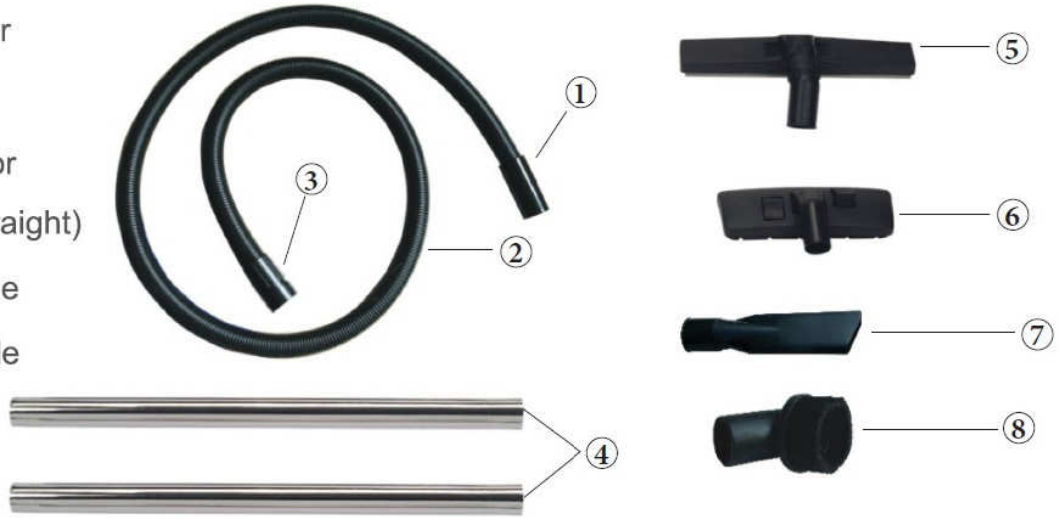

T: 07 3559169 M: 016 7233169 E: tonemaxs@hotmail.com

WHD-241

DURO® Wall Mounted Hair Dryer

Model: WHD-241
Specification :
Material: ABS Plastic
Dimension: 210mm(W) x 100mm(D) x 165mm(H)
Voltage: 220V(50Hz-60Hz)
Rated power: 1100W
Current: 5.6A
Air speed: 13M/S
Water splash proof: IPX1
Approval: CE certification
Packing: 12pcs/ctn
G.W/N.W: 13/12kgs
*** Power ON/OFF switch For Safety**
*** SHAVERS PLUG**

WHD-242

DURO® Wall Mounted Hair Dryer

Model: WHD-242
Specification :
Material: ABS Plastic
Dimension: 110mm(W) x 140mm(D) x 245mm(H)
Voltage: 220V(50Hz-60Hz)
Rated power: 1100W
Current: 5.5A
Air speed: 13M/S
Water splash proof: IPX1
Approval: CE certification
Packing: 12pcs/ctn
G.W/N.W: 16.5/13.5kgs
*** Power ON/OFF switch For Safety**
*** SHAVERS PLUG**

DURO® Wall Mounted Hair Dryer

Model: WHD-251
Specification :
Material: ABS Plastic
Voltage: 240V(50Hz-60Hz)
Rated power: 1200W
Air Temperature : 65±15°C
Water splash proof: IPX1
Air speed: >11M/S
Dimension: 350mm(W) x 180mm(D) x 95mm(H)
Approval: ISO9001 SAA
Packing: 12pcs/ctn
*** Power ON/OFF switch For Safety**
*** SHAVERS PLUG**

WHD-251

DURO® Wall Mounted Hair Dryer

Model: WHD-252
Specification :
Material: ABS Plastic
Voltage: 240V(50Hz-60Hz)
Rated power: 1200W
Air Temperature : 65±15°C
Water splash proof: IPX1
Air speed: >11M/S
Dimension:195mm(W) x 90mm(D) x 260mm(H)
Approval: ISO9001 SAA
Packing: 12pcs/ctn
*** Power ON/OFF switch For Safety**
*** SHAVERS PLUG**

WHD 252

WHD-253

DURO® Wall Mounted Hair Dryer

Model: WHD-253
Specification :
Material: ABS Plastic
Voltage: 240V(50Hz-60Hz)
Rated power: 1200W
Air Temperature : 65±15°C
Water splash proof: IPX1
Air speed: >11M/S
Dimension: 30mm(W) x 120mm(D) x 150mm(H)
Approval: ISO9001 SAA
Packing: 12pcs/ctn
*** Power ON/OFF switch For Safety**
*** SHAVERS PLUG**

WHD-254

DURO® Wall Mounted Hair Dryer

Model: WHD-254
Specification :
Material: ABS Plastic
Voltage: 240V(50Hz-60Hz)
Rated power: 1200W
Air Temperature : 65±15°C
Water splash proof: IPX1
Air speed: >15M/S
Dimension: 30mm(W) x 120mm(D) x 150mm(H)
Approval: ISO9001 SAA
Packing: 12pcs/ctn

HD-115-A

DURO® Automatic Hand Dryer 1600
(Aluminium-alloy casing)

Model: HD 115-A
Features :
- Material: Aluminium-alloy
- Aluminium-alloy casing
- Auto infrared sensor, quick time reaction
- Water-proof and fire-resistant coating
- Quiet, powerful, long-life motor
- Decorative appearance to create a more hygiene and impressive bathroom
- Its ply is 4mm

Specification :
Material: Aluminium-alloy
Voltage: 240V(50Hz-60Hz)
Rated power: 1400W
Air Temperature : 65±15°C
Water splash proof: IPX1
Air speed: >15M/S
Dimension: 265mm(W) x 155mm(D) x 200mm(H)
Approval: ISO9001 SAA
Packing: 12pcs/ctn

HD-116-A

DURO® Automatic Hand Dryer

Model: HD 116-A
Specification :
Material: ABS Plastic
Voltage: 240V(50Hz-60Hz)
Rated power: 2000W
Air Temperature : 65±15°C
Water splash proof: IPX1
Air speed: >15M/S
Dimension: 248mm(W) x 230mm(D) x 250mm(H)
Approval: ISO9001 SAA
Packing: 12pcs/ctn

T: 07 3559169 M: 016 7233169 E: tonemaxs@hotmail.com

DURO® Automatic Hand Dryer

HD-237

Model: HD 237
Specification :
Material: ABS Plastic
Dimensions: 235mm(W) x 200mm(D) x 245mm(H)
Voltage: 220V(50Hz-60Hz)
Rated power: 2100W
Current: 10.0A
Air speed: 30M/S
Water splash proof: IPX1
Approval: CE certification
Packing: 4pcs/ctn
G.W/N.W: 15/12.5kgs

DURO® Stainless Steel Automatic Hand Dryer

HD-238

Model: HD 238
Specification :
Material: Stainless Steel (Mirror Shine)
Dimensions: 235mm(W) x 200mm(D) x 245mm(H)
Voltage: 220V(50Hz-60Hz)
Rated power: 2100W
Current: 10.0A
Air speed: 30M/S
Water splash proof: IPX1
Approval: CE certification
Packing: 4pcs/ctn
G.W/N.W: 16/13kgs

DURO® Stainless Steel Automatic Hand Dryer

Model: HD 239
Specification :
Material: Stainless Steel (Mirror Shine)
Dimensions: 265mm(W) x 171mm(D) x 270mm(H)
Voltage: 220V(50Hz-60Hz)
Rated power: 1800W
Current: 7.0A
Air speed: 60M/S
Water splash proof: IPX1
Approval: CE certification
Packing: 2pcs/ctn
G.W/N.W: 9/7kgs

HD-239

DURO® Stainless Steel Automatic Hand Dryer

Model: HD 240
Specification :
Material: Stainless Steel (Mirror Shine)
Dimensions: 272mm(W) x 164mm(D) x 325mm(H)
Voltage: 220V(50Hz-60Hz)
Rated power: 2750W
Current: 12.0A
Air speed: 30M/S
Water splash proof: IPX1
Approval: CE certification
Packing: 2pcs/ctn
G.W/N.W: 10/8.2kgs

HD-240

DURO® Ultra Dry Pro-Jet Hand Dryer

Features :
STRONG WIND IN 95 METERS/SECONDS DRYER HANDS IN 5-7 SECONDS
Jet Air hand dryer adopts double air jet technology with high speed DC brushless motor which makes the wind speed reaching 95 meter / seconds, it cooperates with warm wind function to dry the water on hand in 5-7 seconds. You only need to rotate your hands back and forward slowly without wiping.

UNIQUE VERTICAL DESIGN KEEPS THE FLOOR DRY AND CLEAN
Jet Air hand dryer adopts new design for new appearance to avoid water dropping on the floor to ensure the health standard

NEW APPERANCE DESIGN : SIMPLE BEAUTIFUL GENEROUS
The jet air hand dryer adopts new appearance design, revealing fashion & beauty which is simple,elegant and creative. It is essential product for the high class environment, as it can satisfy the highest health standard requirement for some specific places and it is really classic among new hand dryer!

Model: DURO 9803 - A
Specification :
Voltage : 240V (50Hz-60Hz)
Rated power : 1000W
Dry hands time : 5-7 seconds
Air speed : > 95m/s
Dimension: 243mm(W) x 159mm(D) x 463mm(H)
Certificate : CE ISO9001 SAA

DURO 9803-A

DURO 9804-A

DURO® Ultra Dry Pro-Jet Hand Dryer

Features :
STRONG WIND IN 95 METERS/SECONDS DRYER HANDS IN 5-7 SECONDS
Jet Air hand dryer adopts double air jet technology with high speed DC brushless motor which makes the wind speed reaching 95 meter / seconds, it cooperates with warm wind function to dry the water on hand in 5-7 seconds. You only need to rotate your hands back and forward slowly without wiping.

UNIQUE VERTICAL DESIGN KEEPS THE FLOOR DRY AND CLEAN
Jet Air hand dryer adopts new design for new appearance to avoid water dropping on the floor to ensure the health standard

NEW APPERANCE DESIGN : SIMPLE BEAUTIFUL GENEROUS
The jet air hand dryer adopts new appearance design, revealing fashion & beauty which is simple,elegant and creative. It is essential product for the high class environment, as it can satisfy the highest health standard requirement for some specific places and it is really classic among new hand dryer!

Model: DURO 9804 - A
Specification :
Voltage : 240V (50Hz-60Hz)
Rated power : 1200W
Dry hands time : 5-7 seconds
Air speed : > 100m/s
Dimension: 300mm(W) x 190mm(D) x 650mm(H)
Certificate : CE ISO9001 SAA

GENESIS OFFICE SUPPLY SDN BHD
T: 07 3559169 M: 016 7233169 E: tonemaxs@hotmail.com

three different pumps

DURO® 1000ml Manual liquid Soap / Foam / Spray Dispenser

DURO 9530

Can fill type bottle

Packing : 40 pcs / carton
Product Meas : 103(W) x 94.5(D) x 206(H) mm

Features :
- Have three different pumps : liquid, form, spray, you can choose one of them
- ABS plastic material
- This manual soap dispenser can use disposable bag
- One drop : 1.5ml(liquid), 0.4ml (foam), 0.3ml(spray)
- Simple structure the whole products is detachable, easy and convenient, more quickly for after-sales service
- Pump head pads used silica gel, high resistance to wear, spring elasticity can be used more than 300,000 times

DURO® 1000ml Manual Liquid Soap / Foam / Spray Dispenser

Packing : 60 pcs / carton
Product Meas : 114(W) x 104(D) x 249(H) mm

Features :
- Have three different pumps : liquid, form, spray, you can choose one of them
- This manual soap dispenser can use refillable bottle (Change different liquid need to replace the corresponding pump)
- ABS plastic material
- Simple structure, the whole products is detachable, easy and convenient, more quickly for after-sales service
- Lockable, wall-mounted, easy to refill liquid and clean
- The glue cushion of pump head adopts silica gel, strong wear resistance, spring elasticity can be used more than 300,000 times
- Fashional and elegant design, which can meet different countries' markets

Three different pumps

Can fill type bottle

DURO 9531

DURO 9532

Three different pumps

Can fill type bottle

DURO® 1000ml Automatic Liquid Soap / Foam / Spray Dispenser

Packing : 24 pcs / carton
Product Meas : 145(W) x 140(D) x 280(H) mm

Features :
- Have three different pumps : liquid, form, spray, you can choose one of them
- ABS plastic material
- This automatic soap dispenser can use refillable bottle
- One drop : 1.5ml(liquid), 0.4ml (foam), 0.3ml(spray)
- Simple structure the whole products is detachable, easy and convenient, more quickly for after-sales service
- Pump head pads used silica gel, high resistance to wear, spring elasticity can be used more than 300,000 times
- This products 4 pcs battery of size C ; support AC/DC power
- The machine is sensor, just out your hand under the pump no more that 10cm distance

DURO® 250 x 2 ml Double Liquid Soap Dispenser

Packing : 50 pcs / carton
Product Meas : 115(W) x 75(D) x 215(H) mm

Features :
- International standard products made by imported ABS engineering plastic, sturdy and durable, super-quality
- ABS plastic material
- There is a window on the surface and it is convenient to know the usage of liquid
- The button is aiti-skidding and wear-resisting with super hand feeling
- The glue cushion of pump head is made of silica gel, strong wear resistance, spring elasticity
- Can be used more than 300,000 times
- Simple structure the whole products is detachable, easy and convenient, more quickly for after-sales service
- With anti-theft lock design, safe management, keep the liquid clean
- Unique wall-mounted design, eliminates shower bottle clutter and save space, hygienic
- Can be used more than 300,000 times
- Perfect for senior hotel, luxury club, bathroom, beauty, salon, home etc...

DURO 9533

T: 07 3559169 M: 016 7233169 E: tonemaxs@hotmail.com

DURO 9502-T DURO 9502-W

DURO® 400ml Liquid Soap Dispenser

Packing : 40 pcs / carton

Product Meas : 85mm(W) x 80mm(D) x 240mm(H)

- Anti Soap Leakage
- Heavy Duty , Smooth Reliable Pump
- Pump Pre-Measures Just The Right Amount ..... Every Time !
- High Impact Resistant ABS Material
- Level Indicator Window
- Easy To Open And Fill With Your Favorite Liquids

DURO 9503-T DURO 9503-W

DURO® 1000ml Liquid Soap Dispenser

Packing : 20 pcs / carton

Product Meas : 125mm(W) x 115mm(D) x 260mm(H)

- Anti Soap Leakage
- Heavy Duty , Smooth Reliable Pump
- Pump Pre-Measures Just The Right Amount ..... Every Time !
- High Impact Resistant ABS Material
- Level Indicator Window
- Easy To Open And Fill With Your Favorite Liquids

DURO® 1000ml Liquid Soap Dispenser 'Hospital'Workshop'Kitchen'

Packing : 20 pcs / carton

Product Meas : 125mm(W) x 200mm(D) x 250mm(H)

- Anti Soap Leakage
- Pump Pre-Measures Just The Right Amount ..... Every Time !
- High Impact Resistant ABS Material
- Level Indicator Window
- Easy To Open And Fill With Your Favorite Liquids

DURO 9507-T DURO 9507-W

DURO® 1000ml Liquid Soap Dispenser

Packing : 12 pcs / carton

Product Meas : 160mm(W) x 90mm(D) x 240mm(H)

- Anti Soap Leakage
- Heavy Duty, Smooth Reliable Pump
- Pump Pre-Measures Just The Right Amount ..... Every Time !
- High Impact Resistant ABS Material
- Level Indicator Window
- Easy To Open And Fill With Your Favorite Liquids

DURO 9510-T DURO 9510-W

DURO 9511

DURO® 350ml x 2 Double Liquid Soap Dispenser

Packing : 20 pcs / carton

Product Meas : 130mm(W) x 75mm(D) x 210mm(H)

- Anti Soap Leakage
- Heavy Duty, Smooth Reliable Pump
- Pump Pre-Measures Just The Right Amount ..... Every Time !
- High Impact Resistant ABS Material
- Level Indicator Window
- Easy To Open And Fill With Your Favorite Liquids

DURO 9515

DURO® 350ml x 2 Double Liquid Soap Dispenser

Packing : 20 pcs / carton

Product Meas : 136mm(W) x 90mm(D) x 213mm(H)

- Anti Soap Leakage
- Heavy Duty, Smooth Reliable Pump
- Pump Pre-Measures Just The Right Amount ..... Every Time !
- High Impact Resistant ABS Material
- Level Indicator Window
- Easy To Open And Fill With Your Favorite Liquids

DURO® 400ml x 2 Double Liquid Soap Dispenser

Packing : 30 pcs / carton

Product Meas : 90mm(W) x 100mm(D) x 182mm(H)

- Stylish design
- Elegant large push button design easy for operation
- Refillable container or disposable cartridge bag use
- Pump last up to 30,000 press with 0.6ml / shot
- Container capacity is 400ml use for 666 times
- High grade heavy duty ABS material use for cover and base

DURO 9523

DURO® 350ml Soap Dispenser

Packing : 40 pcs / carton

Product Meas : 63mm(W) x 75mm(D) x 210mm(H)

- Anti Soap Leakage
- Heavy Duty, Smooth Reliable Pump
- Pump Pre-Measures Just The Right Amount... Every Time!
- High Impact Resistant ABS Material
- Level Indicator Window
- Easy To Open And Fill With Your Favorite Liquids

DURO 9513

DURO 9516

DURO® 800ml Auto Liquid Soap Dispenser

Packing : 12 pcs / carton

Product Meas : 250mm(W) x 150mm(D) x 100mm(H)

Technical Specification

- Battery : Alkaline AA 1.5v (4 pcs)
- Battery Life : > 20000 times / shot
- Volumn / Shot : 0.4 / shot
- Speed / Shot : 0.6-0.8 / shot
- Sensing Distance : 1cm-10cm

DURO 9518

DURO® 350ml Soap Dispenser

Packing : 40 pcs / carton

Product Meas : 63mm(W) x 75mm(D) x 210mm(H)

- Anti Soap Leakage
- Heavy Duty, Smooth Reliable Pump
- Pump Pre-Measures Just The Right Amount... Every Time!
- High Impact Resistant ABS Material
- Level Indicator Window
- Easy To Open And Fill With Your Favorite Liquids

DURO 9520

DURO® 400ml Liquid Soap Dispenser

Packing : 30 pcs / carton

Product Meas : 90mm(W) x 100mm(D) x 182mm(H)

- Stylish design
- Elegant large push button design easy for operation
- Refillable container or disposable cartridge bag use
- Pump last up to 30,000 press with 0.6ml / shot
- Container capacity is 400ml use for 666 times
- High grade heavy duty ABS material use for cover and base

GENESIS OFFICE SUPPLY SDN BHD
T: 07 3559169 M: 016 7233169 E: tonemaxs@hotmail.com

DURO 9501-T

DURO 9501-W

DURO® 1000ml Foam Soap Dispenser

Packing : 24 pcs / carton

Product Meas : 130mm(W) x 130mm(D) x 230mm(H)

- Anti Soap Leakage
- Heavy Duty , Smooth Reliable Pump
- Pump Pre-Measures Just The Right Amount ..... Every Time !
- High Impact Resistant ABS Material
- Level Indicator Window
- Easy To Open And Fill With Your Favorite Liquids

DURO® 400ml Foam Soap Dispenser

Packing : 40 pcs / carton

Product Meas : 90mm(W) x 95mm(D) x 220mm(H)

- Anti Soap Leakage
- Heavy Duty , Smooth Reliable Pump
- Pump Pre-Measures Just The Right Amount ..... Every Time !
- High Impact Resistant ABS Material
- Level Indicator Window
- Easy To Open And Fill With Your Favorite Liquids

DURO 9504-T

DURO 9504-W

DURO 9505-T

DURO 9505-W

DURO® 1000ml Foam Soap Dispenser

Packing : 20 pcs / carton

Product Meas : 120mm(W) x 110mm(D) x 255mm(H)

- Anti Soap Leakage
- Heavy Duty , Smooth Reliable Pump
- Pump Pre-Measures Just The Right Amount ..... Every Time !
- High Impact Resistant ABS Material
- Level Indicator Window
- Easy To Open And Fill With Your Favorite Liquids

DURO® 1000ml Foam Soap Dispenser

Packing : 12 pcs / carton

Product Meas : 160mm(W) x 90mm(D) x 240mm(H)

- Anti Soap Leakage
- Heavy Duty, Smooth Reliable Pump
- Pump Pre-Measures Just The Right Amount ..... Every Time !
- High Impact Resistant ABS Material
- Level Indicator Window
- Easy To Open And Fill With Your Favorite Liquids

DURO 9509-T

DURO 9509-W

DURO 9517

DURO® 800ml Auto Foam Soap Dispenser

Packing : 12 pcs / carton

Product Meas : 250mm(W) x 150mm(D) x 100mm(H)

Technical Specification

- Battery : Alkaline AA 1.5v (4pcs)
- Battery Life : > 20000 times / shot
- Volumn shot : 0.4ml / shot
- Speed Shot : 0.6-0.8s / shot
- Sensing Distance : 1cm - 10cm

DURO 9519

DURO® 400ml Foam Soap Dispenser

Packing : 30 pcs / carton

Product Meas : 90mm(W) x 100mm(D) x 182mm(H)

- Stylish design
- Elegant large push button design easy for operation
- Refillable container or disposable cartridge bag use
- Pump last up to 30,000 press with 0.4ml / shot
- Container capacity is 400ml use for 1,000 times
- High grade heavy duty ABS material use for cover and base

T: 07 3559169 M: 016 7233169 E: tonemaxs@hotmail.com

SANITIZER DISPENSER / STAINLESS STEEL LIQUID SOAP DISPENSER

DURO 9521

DURO® 400ml Mist Spray Sanitizer Dispenser

Packing : 30 pcs / carton
Product Meas : 90mm(W) x 100mm(D) x 182mm(H)

- Stylish design
- Elegant large push button design easy for operation
- Refillable container or disposable cartridge bag use
- Pump last up to 30,000 press with 0.3ml / shot
- Container capacity is 400ml use for 1,300 times
- High grade heavy duty ABS material use for cover and base

DURO 9514

DURO® 350ml Toilet Seat Sanitizer Dispenser

Packing : 40 pcs / carton
Product Meas : 63mm(W) x 75mm(D) x 210mm(H)

- Anti Leakage
- Heavy Duty, Smooth Reliable Pump
- Pump Pre-Measures Just The Right Amount..... Every Time!
- High Impact Resistant ABS Material
- Level Indicator Window
- Easy To Open And Fill With Your Favorite Liquids

DURO® 300ml Auto Mist Spray Hand Sanitizer Dispenser

Packing : 20 pcs / carton
Product Meas : 90(DIA) x 230(H) mm

Status
- The LED indicator will flash rapidly when switched on
- Green light will flash every 2 seconds
- Blue light will flash before spray
- Red light flash

Specify
- Dispenser is adjusting
- Not install bottle
- Dispenser is activated to work when the flashing slows to one every 2 seconds
- Dispenser is in normal working mode
- Dispenser is ready to spray
- Battery is low

DURO 9522

SD-187/SS

Stainless Steel Soap Dispenser 1250ml

Size : 200mm(W) X 70mm(D) x 115mm(H)

- Anti Soap Leakage
- Heavy Duty, Smooth Reliable Pump
- Pump Pre-Measures Just The Right Amount.... Every Time!
- Level Indicator Window
- Easy To Open And Fill With Your Favorite Liquids

SD-188/SS

Stainless Steel Soap Dispenser 500ml

Size : 95mm(W) X 55mm(D) x 170mm(H)

- Anti Soap Leakage
- Heavy Duty, Smooth Reliable Pump
- Pump Pre-Measures Just The Right Amount.. Every Time!
- Level Indicator Window
- Easy To Open And Fill With Your Favorite Liquids

Stainless Steel Soap Dispenser 1200ml

Size : 130mm(W) X 55mm(D) x 203mm(H)

- Anti Soap Leakage
- Heavy Duty, Smooth Reliable Pump
- Pump Pre-Measures Just The Right Amount... Every Time!
- Level Indicator Window
- Easy To Open And Fill With Your Favorite Liquids

SD-182/SS

Stainless Steel Soap Dispenser 1250ml c/w Polish or Hairline Finish

Size : 120mm(W) X 70mm(D) x 205mm(H)

- Anti Soap Leakage
- Heavy Duty, Smooth Reliable Pump
- Pump Pre-Measures Just The Right Amount..... Every Time!
- Level Indicator Window
- Easy To Open And Fill With Your Favorite Liquids

SD-181/SS

T: 07 3559169 M: 016 7233169 E: tonemaxs@hotmail.com

DURO 9512-T DURO 9512-W

DURO® 800ml Liquid Soap Dispenser

Packing : 30 pcs / carton
Product Meas : 135mm(W) x 85mm(D) x 230mm(H)

- Anti Soap Leakage
- Heavy Duty , Smooth Reliable Pump
- Pump Pre-Measures Just The Right Amount ..... Every Time !
- High Impact Resistant ABS Material
- Level Indicator Window
- Easy To Open And Fill With Your Favorite Liquids

DURO® Multi Fold Paper Towel Dispenser (LARGE)

Packing : 6 pcs / carton
Product Meas : 270mm(W) x 120mm(D) x 370mm(H)

- High Impact Resistant ABS Material
- Level Indicator Window
- Ideal For Heavy Duty Washroom
- Hinged At The Bottom For Easy Refilling
- Hold Up To Multifold Towels
- Covered, Key-Lock Mechanism Provides Protection Against Waste And Pilferage
- Offers An Economical Approach To Multifold Towel Dispensing

DURO 9022-T DURO 9022-W

DURO 9021-T DURO 9021-W

DURO® Multi Fold Paper Towel Dispenser (MEDIUM)

Packing : 6 pcs / carton
Product Meas : 265mm(W) x 120mm(D) x 300mm(H)

- High Impact Resistant ABS Material
- Level Indicator Window
- Ideal For Heavy Duty Washroom
- Key Locking System
- Hinged At The Bottom For Easy Refilling
- Covered, Key-Lock Mechanism Provides Protection Against Waste And Pilferage
- Offers An Economical Approach To Multifold Towel Dispensing

DURO® Jumbo Roll Tissue Dispenser

Packing : 6 pcs / carton
Product Meas : 265mm(W) x 120mm(D) x 300mm(H)

- High Impact Resistant ABS Material
- Level Indicator Window
- Ideal For Heavy Duty Washroom
- Key Locking System
- Hinged At The Bottom For Easy Refilling
- Covered, Key-Lock Mechanism Provides Protection Against Waste And Pilferage
- Offers An Economical Approach To Multifold Towel Dispensing

DURO 9023-T DURO 9023-W

DURO 9808

DURO® Centre Pull Hand Towel Dispenser

Packing : 6 pcs / carton
Product Meas : 230mm(Dia) x 325mm(H)

- High Impact Resistant PP Material
- Ideal For Busy Prestige Washroom Locations
- Unique Stylish Design
- Easy Replenishing Of Centre Feed Paper
- Key Locking System

T: 07 3559169 M: 016 7233169 E: tonemaxs@hotmail.com

DURO 9001-T

DURO 9001-W

DURO® Tiny Multi Fold Paper Towel Dispenser

Packing : 20 pcs / carton
Product Meas : 270mm(W) x 100mm(D) x 200mm(H)

- High Impact Resistant ABS Material
- Level Indicator Window
- Ideal For Heavy Duty Washroom
- Hinged At The Bottom For Easy Refilling

DURO® Major Multi Fold Paper Towel Dispenser

Packing : 10 pcs / carton
Product Meas : 270mm(W) x 105mm(D) x 370mm(H)

- High Impact Resistant ABS Material
- Level Indicator Window
- Ideal For Heavy Duty Washroom
- Hinged At The Bottom For Easy Refilling

DURO 9002-T

DURO 9002-W

DURO 9013-T

DURO 9013-W

DURO® Elegant Multi Fold Paper Towel Dispenser

Packing : 20 pcs / carton
Product Meas : 270mm(W) x 95mm(D) x 200mm(H)

- High Impact Resistant ABS Material
- Level Indicator Window
- Ideal For Heavy Duty Washroom
- Hinged At The Bottom For Easy Refilling

DURO® Senior Multi Fold Paper Towel Dispenser

Packing : 10 pcs / carton
Product Meas : 270mm(W) x 100mm(D) x 370mm(H)

- High Impact Resistant ABS Material
- Level Indicator Window
- Ideal For Heavy Duty Washroom
- Hinged At The Bottom For Easy Refilling

DURO 9014-T
DURO 9014-W

DURO® Slender Multi Fold Paper Towel Dispenser

Packing : 12 pcs / carton
Product Meas : 230mm(W) x 75mm(D) x 370mm(H)

- High Impact Resistant ABS Material
- Viewing Window For More Efficient Servicing
- Dispensers Are Key Lockable To Deter Pilferage And Misuse Or Snaplock For Ease Of Servicing
- Hinged At The Bottom For Easy Refilling

DURO 9015-T
DURO 9015-W

DURO 9536

DURO 9537

DURO® M-Folded Hand Towel Dispenser

Packing : 16 pcs / carton
Product Meas : 253mm(W) x 112mm(D) x 351mm(H)

Product Characteristic :

- There is a lock on this unit to keep the paper clean and safe
- High transparent lens could check on paper use
- Advanced imported raw material, sturdy and durable
- The shell can be removed and it install easily
- The generous and elegant design is suitable for luxury club, star hotel, airport, office building, school, factory, hospital and other public places

DURO® M-Folded Hand Towel Dispenser

Packing : 16 pcs / carton
Product Meas : 260mm(W) x 109mm(D) x 205mm(H)

Product Characteristic :

- There is a lock on this unit to keep the paper clean and safe
- High transparent lens could check on paper use
- Advanced imported raw material, sturdy and durable
- The shell can be removed and it install easily
- The generous and elegant design is suitable for luxury club, star hotel, airport, office building, school, factory, hospital and other public places

T: 07 3559169 M: 016 7233169 E: tonemaxs@hotmail.com

SENSOR / AUTO CUT PAPER TOWEL DISPENSER

DURO® Two Function Touchless Hand Towel Dispenser

Packing : 4 pcs / carton
Product Meas : 298mm(W) x 237mm(D) x 415mm(H)

DURO 9534

Product Characteristic :
- Automatically dispenser paper within 3 second when ths first tissue has taken or sensor operating
- Requires paper roll with max x 210mm diameter and 35mm paper inner core for installation
- There is a lock on this unit to keep the paper clean and safe
- Low power warning, the light flashes when the power in low condition
- Current time and temperature can be seen on the screen. Power usage could be seen clearly
- Can set the working day from Monday to Sunday by free, and with alarm clock design
- Two function under Model Set condition :
- (1) Tear & Go : once you tear a paper from the machine, another paper will out automatically
- (2) Sensor : when your hands away from the sensitive area within 6cm, the paper out automatically
- Streamline appearance, elegant. Suitable for any enviroment. Widely used in luxury club, star, hotel, airport, office building, school, factory, hospital etc...

Specifications :
- Need 4 pcs battery of size D
- Support AC/DC power
- Material : ABS & PC

DURO® Auto Cut Paper Towel Dispenser

Packing : 4 pcs / carton
Product Meas : 300mm(W) x 237mm(D) x 410mm(H)

Product Characteristic :
- High quality : Advanced imported ABS raw material, sturdy and durable
- Practical Fuction : one-at-the-time towel dispensing reduces waste
- Sanitation : Create a more hygienic environment
- Convenience : The machine cut the paper automatically, high transparent lens could check on paper usage
- Safety management : Anti-theft lock design to keep the filling clean and prevent man-made sabotage
- Attractive appearance : Unique design, perfect for hospital, hotel, airport, office building and other public place

Specifications :
- To Grade ABC Auto Cut Toilet Tissue Papel Towel Dispenser ABS material
- Lock design
- High quality
- CE & RCHS approval

DURO 9535

HRT 2000

HRT 3000

HRT Paper Towel Dispenser (Manual)

Model: HRT 2000
Size: 275mm(W) x 230mm(D) x 390mm(H)

HRT Paper Towel Dispenser (Auto)

Model: HRT 3000
Size: 275mm(W) x 230mm(D) x 390mm(H)

T: 07 3559169 M: 016 7233169 E: tonemaxs@hotmail.com

PAPER TOWEL DISPENSER / TISSUE DISPENSER

DURO 9536

DURO® M-Folded Hand Towel Dispenser

Packing : 16 pcs / carton
Product Meas : 253mm(W) x 112mm(D) x 351mm(H)

Product Characteristic :
- There is a lock on this unit to keep the paper clean and safe
- High transparent lens could check on paper use
- Advanced imported raw material, sturdy and durable
- The shell can be removed and it install easily
- The generous and elegant design is suitable for luxury club, star hotel, airport, office building, school, factory, hospital and other public places

DURO® M-Folded Hand Towel Dispenser

Packing : 16 pcs / carton
Product Meas : 260mm(W) x 109mm(D) x 205mm(H)

Product Characteristic :
- There is a lock on this unit to keep the paper clean and safe
- High transparent lens could check on paper use
- Advanced imported raw material, sturdy and durable
- The shell can be removed and it install easily
- The generous and elegant design is suitable for luxury club, star hotel, airport, office building, school, factory, hospital and other public places

DURO 9537

DURO 9538

DURO® Jumbo Roll Tissue Dispenser

Packing : 16 pcs / carton
Product Meas : 285mm(W) x 133mm(D) x 303mm(H)

Product Characteristic :
- Two inner cores, can hold different inner core size of paper towel
- Lock design to keep the paper clean and safe
- High transparent lens on shell could check on paper usage
- Advanced imported impact resistance ABS raw material, sturdy and durable
- Streamline appearance, elegant generous
- Glossy surface, unique appearance design
- Green and environment-friendly
- Applicable in public toilet

DURO® 2 In 1 Double Toilet Roll & Bathroom Tissue Dispenser

Packing : 30 pcs / carton
Product Meas : 146mm(W) x 138mm(D) x 275mm(H)

Product Characteristic :
- Product can put a small dual-volume, small double-pack of paper, security reserves
- Interlocking decorative design to prevent human theft
- Engineering plastic shell, solid structure to prevent damage
- Dustproof, waterproof design, to maintain the cleanlines of the toilet paper, to improve the health image
- Install and replace the use of simple and convenient
- A variety of colors to choose from, tailored for your home
- Suitable for star hotels, guesthouses, homes, public places,etc...

DURO 9539

T: 07 3559169 M: 016 7233169 E: tonemaxs@hotmail.com

DURO 9012-T

DURO 9012-W

DURO® Exquisite Jumbo Roll Tissue Dispenser

Packing : 12 pcs / carton

Product Meas : 280mm(W) x 120mm(D) x 300mm(H)

- High Impact Resistant ABS Material
- Level Indicator Window
- Ideal For Heavy Duty Washroom
- Key Locking System
- Hinged At The Bottom For Easy Refilling

DURO® Jumbo Roll Tissue Dispenser

Packing : 6 pcs / carton

Product Meas : 410mm(W) x 140mm(D) x 310mm(H)

- High Impact Resistant ABS Material
- Unique Stylish Design
- Level Indicator Window
- Ideal For Busy Prestige Washroom Locations
- Key Locking System
- Stub-Roll Feature Reduces Waste By Restricting Access To The Second Roll Before The Main Roll Is Used Up
- Only 1 Roll is Accessible At A Time

DURO 9016-T

DURO 9016-W

DURO 9007-T

DURO 9007-W

DURO® Double Jumbo Roll Tissue Dispenser

Packing : 4 pcs / carton

Product Meas : 530mm(W) x 120mm(D) x 295mm(H)

- Sustained Use By Large Numbers
- High Impact Resistant ABS Material
- Unique Stylish Design
- Level Indicator Window
- Ideal For Busy Prestige Washroom Locations
- Key Locking System
- Stub-Roll Feature Reduces Waste By Restricting Access To The Second Roll Before The Main Roll Is Used Up
- Only 1 Roll Is Accessible At A Time
- Capicity 2 x Rolls

DURO® Jumbo Roll Dispenser

Packing : 16 pcs / carton

Product Meas : 285mm(W) x 133mm(D) x 303mm(H)

Product Charateristic :

- Two inner cores, can hold different inner core size of paper towel
- Lock design to keep the paper clean and safe
- High transparent lens on shell could check on paper usage
- Advanced imported impact resistance ABS raw material, sturdy and durable
- Streamline appearance, elegant generous
- Glossy surface, unique appearance design
- Green and environment-friendly
- Applicable in public toilet

DURO 9538

DURO 9023-W

DURO 9023-T

DURO® Jumbo Roll Tissue Dispenser

Packing : 6 pcs / carton

Product Meas : 265mm(W) x 120mm(D) x 300mm(H)

- High Impact Resistant ABS Material
- Level Indicator Window
- Ideal For Heavy Duty Washroom
- Key Locking System
- Hinged At The Bottom For Easy Refilling
- Covered, Key-Lock Mechanism Provides Protection Against Waste And Pilferage
- Offers An Economical Approach To Multifold Towel Dispensing

T: 07 3559169 M: 016 7233169 E: tonemaxs@hotmail.com

DURO 9539

DURO® 2 in 1 Double Toilet Roll & Bathroom Tissue Dispenser

Packing : 30 pcs / carton
Product Meas : 146mm(W) x 138mm(D) x 275mm(H)

Product Charateristic :
- Product can put a small dual-volume, small double-pack of paper, security reserves
- Interlocking decorative design to prevent human theft
- Engineering plastic shell, solid structure to prevent damage
- Dustproof, waterproof design, to maintain the cleanlines of the toilet paper, to improve the health image
- Install and replace the use of simple and convenient
- A variety of colors to choose from, tailored for your home
- Suitable for star hotels, guesthouses, homes, public places,etc...

DURO® Hygienic Bathroom Tissue Dispenser

Packing : 20 pcs / carton
Product Meas : 145mm(W) x 130mm(D) x 290mm(H)

- High Impact Resistant ABS Material
- Level Indicator Window
- Ideal For Heavy Duty Washroom
- Key Locking System
- Hinged At The Bottom For Easy Refilling

DURO 9005-T

DURO 9005-W

DURO 9006-T

DURO 9006-W

DURO® Double Toilet Roll Dispenser

Packing : 20 pcs / carton
Product Meas : 145mm(W) x 130mm(D) x 290mm(H)

- Sustained Use By Large Numbers
- High Impact Resistant ABS Material
- Unique Stylish Design
- Level Indicator Window
- Ideal For Busy Prestige Washroom Locations
- Key Locking System
- Hinged At The Bottom For Easy Refilling
- We Recommend That You Use A Commercial 200 - 250 Sheet Toilet Roll With This Product
- Only 1 Roll Is Accessible At A Time
- Capicity 2 x Rolls

DURO 9011

DURO® Two Toilet Roll Tissue Dispenser

Packing : 12 pcs / carton
Product Meas : 275mm(W) x 120mm(D) x 170mm(H)

- Sustained Use By Large Numbers
- High Impact Resistant ABS Material
- Ideal For Busy Prestige Washroom Locations
- Unique Stylish Design
- Key Locking System
- Only 1 Roll Is Accessible At A Time
- Capacity 2 x Roll

DURO 9009

DURO® Pop Up Tissue Dispenser

Packing : 24 pcs / carton
Product Meas : 113mm(W) x 72mm(D) x 158mm(H)

- With Toothpick Holder
- High Impact Resistant ABS Material
- Keep Facial Tissue Neatly In The Box
- Ideal For All Places Such As Home, Office, Hotel, Restaurant, Car ....

DURO® Centre Pull Hand Towel Dispenser

Packing : 6 pcs / carton
Product Meas : 235mm(W) x 235mm(D) x 380mm(H)

- High Impact Resistant PC Material
- Ideal For Busy Prestige Washroom Locations
- Unique Stylish Design
- Easy Replenishing Of Centre Feed Paper
- Key Locking System

DURO 9010

DURO® Centre Pull Hand Towel Dispenser

Packing : 6 pcs / carton
Product Meas : 230mm(Dia) x 325mm(H)

- High Impact Resistant PP Material
- Ideal For Busy Prestige Washroom Locations
- Unique Stylish Design
- Easy Replenishing Of Centre Feed Paper
- Key Locking System

DURO 9808

T: 07 3559169 M: 016 7233169 E: tonemaxs@hotmail.com

Stainless Steel Paper Towel Dispenser
Model: PTD-024/SS
Size: 280mm(W) x 101mm (D) x 265mm(H)

Stainless Steel Paper Towel Dispenser
Model: PTD-186/SS
Size: 280mm(W) x 101mm (D) x 360mm(H)

Stainless Steel Paper Towel Dispenser
Model: PTD-183/SS
Size: 275mm(W) x 113mm (D) x 400mm(H)

Stainless Steel Paper Towel Dispenser
Model: PTD-196/SS
Size: 250mm(W) x 150mm (D) x 330mm(H)

Stainless Steel Twin Jumbo Roll Dispenser
Model: TJR-197/SS
Size: 520mm(W) x 285mm(D) x 140mm(H)

Stainless Steel Jumbo Roll Dispenser
Model: JRD-1800/SS
Size: 260mm(Dia) x 125mm(H)

Stainless Steel Jumbo Roll Dispenser
Model: JRD-1900/SS
Size: 255mm(Dia) x 120mm(H)

Stainless Steel Toilet Roll Holder (Full Cover)
Model: TRH-1700/SS
Size: 121mm(W) x 118mm(D) x 120mm(H)

Stainless Steel Toilet Roll Holder (Single Roll)
Model: TRH-1500/SS
Size: 140mm(W) x 90mm(D) x 70mm(H)

Stainless Steel Toilet Roll Holder (Double Roll)
Model: TRH-1600/SS
Size: 265mm(W) x 98mm(D) x 95mm(H)

T: 07 3559169 M: 016 7233169 E: tonemaxs@hotmail.com

(Wall-Mounted)
Stainless Steel
2 in 1 Paper Towel
Dispenser & Disposal
Model: PTD-002/SS
Size: 300mm(W) x 140mm(D)
x 750mm(H)

(Wall-Mounted)
Stainless Steel
2 in 1 Paper Towel
Dispenser & Disposal
Model: PTD-192/SS
Size: 350mm(W) x 140mm(D)
x 1250mm(H)

(Recessed)
Stainless Steel 3 in 1
Paper Towel Dispenser,
Hand Dryer & Disposal
Model: PTD-194/SS
Size: 370mm(W) x 160mm(D)
x 1650mm(H)

(Recessed)
Stainless Steel 2 in 1
Paper Towel Dispenser
& Disposal
Model: PTD-193/SS
Size: 370mm(W) x 160mm(D)
x 1200mm(H)

(Recessed)
Stainless Steel Hand
Dryer with Storage
Cabinet
Model: PTD-200/SS
Size: 335mm(W) x 170mm(D)
x 1400mm(H)

(Wall Mounted)
Stainless Steel 2 in 1
Paper Towel Dispenser
& Disposal
Model: PTD-191/SS
Size: 280mm(W) x 140mm(D)
x 730mm(H)

(Recessed)
Stainless Steel 2 in 1
Paper Towel Dispenser
& Disposal
Model: PTD-190/SS
Size: 330mm(W) x 140mm(D)
x 780mm(H)

T: 07 3559169 M: 016 7233169 E: tonemaxs@hotmail.com

DURO® Fan Air Freshener Dispenser

Packing : 30 pcs / carton
Product Meas : 90mm(W) x 80mm(D) x 240mm(H)

STANDARD FEATURES
- Stylish design
- Chemical resistant
- Polypropylene Plastic (PP) with lockable cover
- Cover Open Upwards
- Micro Processor preset slide switches with LED display for easy setting
- Multi setting Operation
- Day / 24 Hours mode
- Equipped with light sensor and Bicolor LED light showing battery life
- 2 pcs of 'D' size Super Heavy Duty battery can life saving for up to 3 months

DURO 9024

DURO 9029

DURO® Mini Fan Air Freshener Dispenser

Packing : 30 pcs / carton
Product Meas : 88mm(W) x 85mm(D) x 175mm(H)

STANDARD FEATURES
- Stylish design
- Chemical resistant
- Polypropylene Plastic (PP) with lockable cover
- Cover Open Upwards
- Bio-color LED light showing battery life
- Mechanism can be easily removed from dispenser
- 2 pcs of 'AA' Alkaline battery can life saving for up to 3 months
- Installation with plastic holder (optional Feature)

DURO® LCD Air Freshener Dispenser

Packing : 30 pcs / carton
Product Meas : 90mm(W) x 80mm(D) x 240mm(H)

STANDARD FEATURES
- Stylish design
- Chemical resistant
- Polypropylene Plastic (PP) with lockable cover
- Cover Open Upwards
- Micro Processor programmable with LCD display for easy setting
- Setting Day On / Day Off
- Spray interval range from 01-59 minutes
- Choice of Day Off
- Choice of 3,000 / 6,000 / 9,000 sprays aerosol can
- Display show Real Time clock, battery and refill can capacity
- 2 pcs of 'AA' size Alkaline battery can life saving for up to 12 cans of 3,000 spray aerosol refill
- For short can refill only
- Spray counting and testing button

DURO 9025

DURO 9026

DURO® LED Air Freshener Dispenser

Packing : 30 pcs / carton
Product Meas : 90mm(W) x 80mm(D) x 240mm(H)

STANDARD FEATURES
- Stylish design
- Chemical resistant
- Polypropylene Plastic (PP) with lockable cover
- Cover Open Upwards
- Micro Processor preset slide switches with LED display for easy setting
- Setting 5, 10, 15, 25 minutes time interval
- Day / Night / 24 Hours mode
- Choice of 3,000 or 6,000 sprays aerosol refill
- Equipped with light sensor and Bicolor LED light showing battery life
- 2 pcs of 'AA' size Alkaline battery can life saving for up to 6 cans of 3,000 spray aerosol refill
- For short can refill only
- On / Off switch and testing button

DURO® LED Mini Air Freshener Dispenser

Packing : 30 pcs / carton
Product Meas : 370mm(W) x 225mm(D) x 380mm(H)

STANDARD FEATURES
- Stylish design
- Chemical resistant
- Polypopylene Plastic (PP) with lockable cover
- Micro Processor preset slide switches
- Setting 7.5, 15,30 minutes time interval
- 24 Hours mode
- Choice of 3,000 sprays aerosol refill
- 2 pcs of 'AA' size Alkaline battery can life saving for up to 12 cans of 3,000 spray aerosol refill
- For mini can refill only
- On / Off switch and testing button
- Installation with plastic holder (Optional Feature)

DURO 9028

T: 07 3559169 M: 016 7233169 E: tonemaxs@hotmail.com

AIR FRESHENER DISPENSER / BATTERY

DURO® LED 2 in1 Air Freshener Dispenser

DURO 9030

Packing : 30 pcs / carton
Product Meas : 90mm(W) x 73mm(D) x 224mm(H)

STANDARD FEATURES

- Stylish design
- Chemical resistant
- Polypropylene Plastic (PP) with lockable cover
- Cover Open Upwards
- Micro Processor preset slide switches with LED display for easy setting
- Setting 7.5, 15, 30 minutes times time interval
- 24 hour / Night / Day mode
- Equipped with light sensor & bio-color LED light showing battery life
- Mechanism can be easily removed from dispenser
- Choice of 3,000 or 6,000 spray aerosol refill
- 2 pcs of 'AA' size Alkaline battery can life saving for up to 12 cans of 3,000 spray aerosol refill
- For Tall and Short can aerosol refill
- Installation with plastic holder (Optional Feature)

DURO® LCD 2 in1 Air Freshener Dispenser

Packing : 30 pcs / carton
Product Meas : 90mm(W) x 73mm(D) x 224mm(H)

STANDARD FEATURES

- Stylish design
- Chemical resistant
- Polypropylene Plastic (PP) with lockable cover
- Cover Open Upwards
- Micro Processor preset slide switches with LCD display for easy setting
- Setting Day on / Day off
- Spray interval range from 01-59 minutes
- Choice of 3,000 / 6,000 / 9,000 spray aerosol can
- Display show Real Time clock, battery and refill can capacity
- 2 pcs of 'AA' size Alkaline battery can life saving for up to 12 cans of 3,000 spray aerosol refill
- For Tall and Short can aerosol refill
- Installation with plastic holder (Optional Feature)

DURO 9031

DURO 9032

DURO® LCD Pump Air Freshener Dispenser

Packing : 30 pcs / carton
Product Meas : 78mm(W) x 80mm(D) x 207mm(H)

STANDARD FEATURES

- Stylish design
- Chemical resistant
- Polypropylene Plastic (PP) with lockable cover
- Micro Processor preset slide switches with LCD display for easy setting
- Setting Day on / Day off
- Spray interval range from 01-59 minutes
- Display show Real Time clock, battery and refill can capacity
- 3 pcs of 'AA' size Alkaline battery can life saving for up to 6 months
- Installation with plastic holder (Optional Feature)

DURO® Automatic 2 in 1 Aerosol Dispenser

Packing : 30 pcs / carton
Product Meas : 90mm(W) x 80mm(D) x 240mm(H)

STANDARD FEATURES

- Operate by Two D Size Alkaline Batteries
- Power LED
  Green light on visual indicator shows the battery is operating.
- Light Sensor
- Red Light
  Built-in self diagnosis technology incorporated into the compact circuitry system. During spraying, red light blinks to indicate circuitry is functioning properly.
- Adjustable Spray Interval
  Timing between sprays is adjustable (range from 5-25 minutes providing customised odor control and minimum wastage)
- Selector Switch
  Provides odor control only when needed.
  i) 24 hours - Operates 24 hours a day.
  ii) Night - Function only when area is dark - stop automatically when light is detected.
  iii) Day - Function when light is sensed. Stops automatically when area is dark.
- Key Locked Available
  Prevent theft of refill.

DURO 9801

AA Alkaline Battery

Packing : 40 pcs x 18 bxs
= 720 pcs / carton

D Super Heavy Duty Battery

Packing : 24 pcs x 18 bxs
= 288 pcs / carton

GENESIS OFFICE SUPPLY SDN BHD

T: 07 3559169 M: 016 7233169 E: tonemaxs@hotmail.com

AIR FRESHENER / PERFUME / URINAL DEODORIZER / DISPOSABLE HAND, HAIR & BODY SOAP / DEODORANT BLOCK

DURO 75g

DURO® Eko Fresh Air Freshener

Packing : 48 cans / carton

Types of Fragrance
- Import Perfume from UK
- Latest Formulation
- Metal Can, no leaking Issue
- **Citrus, Vanilla Bouquet, Elegance, Fresh Scent, Lemon Zesty, Ocean, Grape, Raspberry, Tropicana, Lavender**

DURO 110ml

DURO® Range Platinum Quality Aerosol Air Freshener Refill

Packing : 48 cans / carton

Types of Fragrance
- **Citrus Zest, Lavender, Potpourri, Vanilla Bouquet, Breezy, Eternity, Lemon Zesty, Raspberry, Grape, Tropicana**

DURO® Range Platinum Quality Aerosol Air Freshener Refill

Types of Fragrance:
Lemon, Lavender, Vanilla Bouquet, Mix Flora, CK, Orange, Orchard, Country Garden, Polo, Baby Powder

DURO 290ml DURO 300ml

300ml Waterbase Refill (For DURO 9032)

Types of Fragrance:
Citrus, Eternity, Breezy, Lavender, Potpourri

DURO 9032-(R)

DURO 500-(R)

Plastic Container Aroma Perfume 500ml / Bottle (For DURO 500)

Types of Fragrance:

1) Lemonglass
2) Citrus
3) Vanilla Bouquet
4) Aqua
5) After Tobacco
6) Breezy
7) Green
8) Lavender
9) Garden
10) Green Tea
11) Romance
12) Escape
13) Air
14) Polo
15) Mist
16) Fresh Scent
17) Lavender 2
18) Morning Glory
19) Melody
20) CK
21) Scent
22) Ocean
23) Melon
24) Rose
25) Voilet
26) Brut
27) Tropical Spa
28) Oceanic
29) Lotus Flower
30) Summer Blossom
31) Raspberry
32) Grape
33) Tropicana
34) Fresh Clean

400ml Cartridge Hand Soap /Hair & Body/ Foam/ Mist Spray (For DURO 9519/9520/9521/9522)

Packing : 12 pkts / carton

DURO 9522-(R)

Urinal Deodorizer

Packing : 200 pcs / carton

- Eliminate Unpleasant odors
- 30 Days Non-Stop Release Fragrance
- Anti-Splash
- Translucent Design and Drain Protected
- VOCs & PAHs Complaint
- Anti-Bacteria
- Eco-Friendly and Biodegradable
- Flexible To Fit Different Urinals
- Private Label Branding Available

Types of Fragrance:
Citrus, Vanilla Bouquet, Grape, Raspbeery, Tropicana, Lavender

DURO 9512-(R)

500ml Cartridge Hand or Hair & Body Soap (For DURO 9512)

Packing : 12 pkts / carton

Types of Fragrance:
Eternity, Lavender, Potpourri, Melody, Brut, Woody, Cologne

Perfume 150ml / Bottle (For DURO 400)

Types Of Fragrance :
- **Citrus, Eternity, Breezy, Lavender, Country Garden, Green Meadow**

Deodorant Block

Packing : 1kgs, 3kgs, 5kgs And 20kgs

GENESIS OFFICE SUPPLY SDN BHD 090

T: 07 3559169 M: 016 7233169 E: tonemaxs@hotmail.com

100% VIRGIN PULP

JOLLY 9911

JOLLY Jumbo Roll Tissue

Material : 100% Virgin Pulp - 2 ply
Packing : 130m x 12 rolls / 1 carton

- Maintaining Superior Gentle Touch And Strength
- A Unique Micro-Embossed Pattern
- Softer Texture
- Strong Even When Wet
- Every Sheet Gives A Unique Sensation Of Softness
- Ensuring The Best Gentle

JOLLY 9912

JOLLY Jumbo Roll Tissue

Material : 100% Virgin Pulp - 2 ply
Packing : 200m x 12 rolls / 1 carton

- Maintaining Superior Gentle Touch And Strength
- A Unique Micro-Embossed Pattern
- Softer Texture
- Strong Even When Wet
- Every Sheet Gives A Unique Sensation Of Softness
- Ensuring The Best Gentle

LIVI Jumbo Roll Tissue

Material : 100% Virgin Pulp - 2 ply
Packing : 300m x 12 rolls / carton

- Maintaining Superior Gentle Touch And Strength
- A Unique Micro-Embossed Pattern
- Softer Texture
- Strong Even When Wet
- Every Sheet Gives A Unique Sensation Of Softness
- Ensuring The Best Gentle

LIVI 9913

LIVI Jumbo Roll Tissue

Material : 100% Virgin Pulp - 1 ply
Packing : 600m x 12 rolls / carton

- Maintaining Superior Gentle Touch And Strength
- A Unique Micro-Embossed Pattern
- Softer Texture
- Strong Even When Wet
- Every Sheet Gives A Unique Sensation Of Softness
- Ensuring The Best Gentle

LIVI 9914

BR 9933

Bathroom Roll

Material : 100% Virgin Pulp - 2 ply
Packing : 140 sheet x 120 Rolls
Size : 95mm x 100mm

- Maintaining Superior Gentle Touch And Strength
- A Unique Micro-Embossed Pattern
- Softer Texture
- Every Sheet Gives A Unique Sensation Of Softness
- Ensuring The Best Gentle

JOLLY 9934

JOLLY Bathroom Roll

Material : 100% Virgin Pulp - 2 ply
Packing : 160 sheet x 120 rolls
Size : 95mm x 100mm

- Maintaining Superior Gentle Touch And Strength
- A Unique Micro-Embossed Pattern
- Softer Texture
- Every Sheet Gives A Unique Sensation Of Softness
- Ensuring The Best Gentle

JOLLY Folded Hand Towel - M Fold 250s

Material : 100% Virgin Pulp
Packing : 250's x 16 pkts / 1 carton
Size : 225mm x 220mm

- Maintaining Superior Gentle Touch And Strength
- A Unique Micro-Embossed Pattern
- Softer Texture
- Strong Even When Wet
- Every Sheet Gives A Unique Sensation Of Softness
- Ensuring The Best Gentle

JOLLY 9917

JOLLY Folded Hand Towel - L Fold 250 (Fully Wrapped)

Material : 100% Virgin Pulp
Packing : 200's x 20 pkts / carton
Size : 200mm x 195mm

- Maintaining Superior Gentle Touch And Strength
- A Unique Micro-Embossed Pattern
- Softer Texture
- Strong Even When Wet
- Every Sheet Gives A Unique Sensation Of Softness
- Ensuring The Best Gentle

JOLLY 9918

GENESIS OFFICE SUPPLY SDN BHD

T: 07 3559169 M: 016 7233169 E: tonemaxs@hotmail.com

100% VIRGIN PULP

Compact Towel (For DURO 9002)

Material : 100% Virgin Pulp - 1 ply
Packing : 150s x 16 pkts / 1 carton
Size : 200mm x 250mm

- Maintaining Superior Gentle Touch And Strength
- A Unique Micro-Embossed Pattern
- Softer Texture
- Every Sheet Gives A Unique Sensation Of Softness
- Ensuring The Best Gentle

LIVI 9935

SERVIETTE 100g

Material : 100% Virgin Pulp - 1 ply
Packing : 60 pkts / carton
Size : 250mm x 300mm

- Maintaining Superior Gentle Touch And Strength
- A Unique Micro-Embossed Pattern
- Softer Texture
- Every Sheet Gives A Unique Sensation Of Softness
- Ensuring The Best Gentle

ELVIE 9920

LIVI 9921

LIVI POP Up Tissue 200s

Material : 100% Virgin Pulp - 1 ply
Packing : 60 pkts / 1 carton
Size : 100mm x 200mm

- Maintaining Superior Gentle Touch And Strength
- A Unique Micro-Embossed Pattern
- Softer Texture
- Every Sheet Gives A Unique Sensation Of Softness
- Ensuring The Best Gentle

JOLLY 9915

JOLLY Hygiene Bathroom Tissue (HBT)

Material : 100% Virgin Pulp - 1 ply
Packing : 400's x 36 pkts / 1 carton
Size : 95mm x 200mm

- Maintaining Superior Gentle Touch And Strength
- A Unique Micro-Embossed Pattern
- Softer Texture
- Every Sheet Gives A Unique Sensation Of Softness
- Ensuring The Best Gentle

LIVI EVO Pop Up Tissue (HBT)

Material : 100% Virgin Pulp - 2 ply
Packing : 200's x 60 pkts / 1 carton
Size : 100mm x 210mm

- Maintaining Superior Gentle Touch And Strength
- A Unique Micro-Embossed Pattern
- Softer Texture
- Every Sheet Gives A Unique Sensation Of Softness
- Ensuring The Best Gentle

LIVI 9932

LIVI Hygiene Bathroom Tissue

Material : 100% Virgin Pulp - 1 ply
Packing : 250's x 72 pkts / 1 carton
Size : 95mm x 200

- Maintaining Superior Gentle Touch And Strength
- A Unique Micro-Embossed Pattern
- Softer Texture
- Every Sheet Gives A Unique Sensation Of Softness
- Ensuring The Best Gentle

LIVI 9926

LIVI 9922

LIVI Cocktail Napkin 250s

Material : 100% Virgin Pulp - 2 ply
Packing : 20 pkts / carton
Size : 230mm x 230mm

- Maintaining Superior Gentle Touch And Strength
- A Unique Micro-Embossed Pattern
- Softer Texture
- Strong Even When Wet
- Every Sheet Gives A Unique Sensation Of Softness
- Ensuring The Best Gentle

LIVI 9936

LIVI Facial Tissue

Material : 100% Virgin Pulp - 2 ply
Packing : 40 sheet x 100 pkts / carton

- Maintaining Superior Gentle Touch And Strength
- A Unique Micro-Embossed Pattern
- Softer Texture
- Strong Even When Wet
- Every Sheet Gives A Unique Sensation Of Softness
- Ensuring The Best Gentle

Indonesian LEGAL Wood
PEFC
LEI
ISO 9001
ISO 14001
ISO 22000
100% Virgin Pulp
OBA FREE
SGS
00170044790807
REACH CERTIFIED
Intertek
ISEGA

T: 07 3559169 M: 016 7233169 E: tonemaxs@hotmail.com

LIVI 9925

LIVI Centre Pull Hand Towel

Material : 100% Virgin Pulp - 1 ply
Packing : 300m x 6 rolls / carton

- Maintaining Superior Gentle Touch And Strength
- A Unique Micro-Embossed Pattern
- Softer Texture
- Strong Even When Wet
- Every Sheet Gives A Unique Sensation Of Softness
- Ensuring The Best Gentle

JOLLY 9924

JOLLY Hand Roll Towel (HRT)

Material : 100% Virgin Pulp
Packing : 150m x 12 rolls / 1 carton

- Maintaining Superior Gentle Touch And Strength
- A Unique Micro-Embossed Pattern
- Softer Texture
- Strong Even When Wet
- Every Sheet Gives A Unique Sensation Of Softness
- Ensuring The Best Gentle
- Hygiene And Quality For Hospital And Clinic

LIVI Industrial Roll (IRT)

Material : 100% Virgin Pulp - 1 ply
Packing : 1000m x 2 rolls / carton

- Maintaining Superior Gentle Touch And Strength
- A Unique Micro-Embossed Pattern
- Softer Texture
- Strong Even When Wet
- Every Sheet Gives A Unique Sensation Of Softness
- Ensuring The Best Gentle

LIVI 9919

LIVI Clinical Roll Dispenser

Product Meas : 615mm(W) x 75mm(D) x 310mm(H)
Material : Mild Steel + Powder Coated

- Clinical Roll Allow Storage And Save Warehousing Cost
- Ideal For Ensuring Hygiene Wiping Of Hospital & Clinic

LIVI 9018

DURO 9020

DURO® 1/2 Fold Toilet Seat Cover Dispenser

Packing : 20 pcs / carton
Product Meas : 420mm(W) x 50mm(D) x 280mm(H)

- High Impact Resistant ABS Material
- Increased Protection Against Germs And Minimizes Cross-Contamination
- Reduces Unnecessary Waste
- Reduces System Clogs Caused By Makeshift Tissue
- Toilet Hygienic
- Superior Quality

LIVI Industrial Roll Dispenser

Product Meas : 440mm(W) x 460mm(D) x 890mm(H)
Material : Mild Steel + Powder Coated

- Industrial Roll Allow Storage And Save Warehousing Cost
- Robust Steel Construction Will Stand Up To General Wear & Tear
- Provides A Stable Base For Dispensing
- Ideal For Ensuring Correct And Measured Usage Of Industrial Wiper Rolls

LIVI 9019

GENESIS OFFICE SUPPLY SDN BHD

T: 07 3559169 M: 016 7233169 E: tonemaxs@hotmail.com

PU Elastic Pole (Heavy Duty)
Size : 80mm(Dia) x 750mm(H)

PE Elastic Pole
Size : 80mm(Dia) x 750mm(H)

Optional:
Chain Holder For Traffic Cone

BP 18
Height: 500mm
Base Size: 280mm x 280mm
Reflective Sticker
Option: Chain Holder

BP 30
Height: 750mm
Base Size: 380mm x 380mm
Reflective Sticker
Option: Chain Holder

BP 40
Height: 1000mm
Base Size: 490mm x 490mm
Reflective Sticker
Option: Chain Holder

Metal Bollard (Large)
Size : 170mm(Dia) x 830mm(H)
Base Size : 300mm x 300mm
Option: with or without hook

Metal Bollard (Small)
Size : 100mm(Dia) x 820mm(H)
Base Size : 150mm x 150mm
Option: with or without hook

Collapsible Parking Pole
Pole: 75mm(Dia)
Bottom Plate: 150mm(W) x 150mm(D)
Total Height: 800mm
Features: with Locking Bracket

Corner Guard
Size : 800mm(H) x 10mm thick
Size : 1000mm(H) x 10mm thick

Adapta Cone
Size : 505mm(W) x 505mm(D) x 1020mm(H)

Wheel Lock (Large)
Colour: Yellow
Features: 17" and above Wheel Base

Wheel Lock (Small)
Colour: Yellow
Features: Up to 16" Wheel Base

No Parking Stand
Size : 460mm(W) x 300mm(D) x 1130mm(H)
Board Size: 460mm(Dia)

Reserved Parking Stand
Size : 490mm(W) x 310mm(D) x 1135mm(H)
Board Size : 490mm(W) x 320mm(H)

T: 07 3559169 M: 016 7233169 E: tonemaxs@hotmail.com

SAFETY PRODUCTS

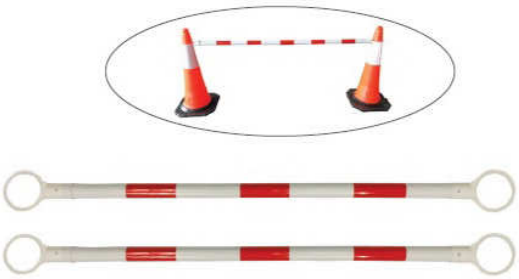

Retractable Cone Bar
Standard Length : 1170mm
Maximum Length : 2150mm

Hoarding Board
Dimension: 1190mm x 70mm x 1165mm(H)
Colour: Red or White

Road Barrier
Dimension: 1180mm x 400mm x 800mm(H)
Colour: Red or White

Rubber Speed Hump
Size : 1000mm(W) x 350mm(D) x 50mm(H)
End Piece Size : 175mm(W) x 350mm(D) x 50mm(H)

Wheel Stopper
Dimension: 500mm(W) x 160mm(D)
x 100mm(H)

Road Safety Mannequin

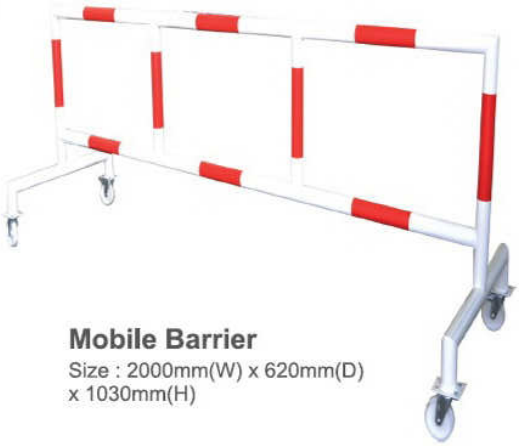

Mobile Barrier
Size : 2000mm(W) x 620mm(D)
x 1030mm(H)

Caution Sign (Large)
Size : 320mm(W) x 320mm(D)
x 1170mm(H)

Caution Sign (Small)
Size : 280mm(W) x 280mm(D)
x 930mm(H)
Wording: Cleaning in Progress
Caution Wet Floor
Work in Progress

A-Standing Caution Sign
Wording: Cleaning in Progress
Caution Wet Floor
Work in Progress

GENESIS OFFICE SUPPLY SDN BHD
T: 07 3559169 M: 016 7233169 E: tonemaxs@hotmail.com

OUTDOOR 320

OUTDOOR 490

OUTDOOR 690

OUTDOOR 800

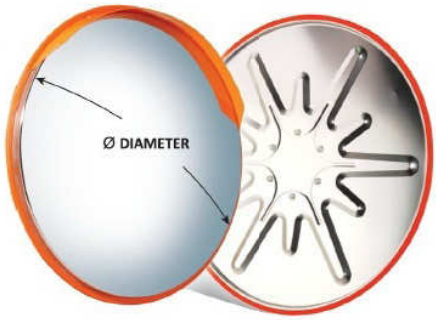

OUTDOOR 1000

Code	Diameter (mm)	Carton Size (mm)	Qty Carton (pc)	Setup Method
OUTDOOR 320	Ø320	365 x 365 x 70	1	Wall / Pole mounted
OUTDOOR 490	Ø490	565 x 565 x 63		
OUTDOOR 600	Ø600	680 x 680 x 175		
OUTDOOR 800	Ø800	905 x 895 x 128		
OUTDOOR 1000	Ø1000	1105 x 1095 x 128		Pole mounted

For Pole Diameter: Ø50mm

Bracket outdoor 320
Bracket outdoor 490

Bracket outdoor 600

For Pole Diameter: Ø75mm

Bracket outdoor 800

Bracket outdoor 1000

OUTDOOR 2030

OUTDOOR 3546

OUTDOOR 4560

OUTDOOR 6080

Code	Dimension (mm)	Carton Size (mm)	Qty Carton (pc)	Setup Method
OUTDOOR 2030	200 x 300	490 x 56 x 238	1	Wall / Pole mounted
OUTDOOR 3546	350 x 460	665 x 67 x 390		
OUTDOOR 4560	450 x 600	633 x 695 x 140		Pole mounted
OUTDOOR 6080	600 x 800	885 x 790 x 140		

For Pole Diameter: Ø50mm

Bracket outdoor 2030
Bracket outdoor 3546

For Pole Diameter: Ø75mm

Bracket outdoor 4560
Bracket outdoor 6080

INDOOR 490 INDOOR 600

Code	Diameter (mm)	Carton Size (mm)	Qty Carton (pc)	Setup Method
INDOOR 490	Ø490	525 x 525 x 110	1	Wall mounted
INDOOR 600	Ø600	675 x 675 x 117		

Bracket indoor 490 & 600

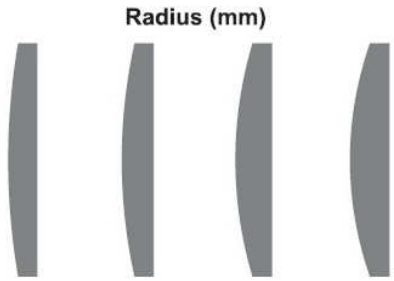

Indoor Convex Mirror without Cap (Wall Mounted)

Dimension: 300mm(Dia)
600mm(Dia)

Outdoor Convex Mirror with Cap (Pole Mounted)

Dimension: 600mm(Dia)
800mm(Dia)
1000mm(Dia)

Dome Convex Mirror 360° Degree

Dimension: 460mm(Dia)
660mm(Dia)

Mild Steel Powder Coating Pole For Outdoor Convex Mirror

For 800mm - 1000mm(Dia) Convex Mirror
1) Pole Mounted Size : 75mm(Dia) x 2438mm(H)
2) Pole Underground Size : 75mm(Dia) x 2743mm(H)

For 600mm(Dia) Convex Mirror
1) Pole Mounted Size : 50mm(Dia) x 2438mm(H)
2) Pole Underground Size : 50mm(Dia) x 2743mm(H)

GENESIS OFFICE SUPPLY SDN BHD
T: 07 3559169 M: 016 7233169 E: tonemaxs@hotmail.com

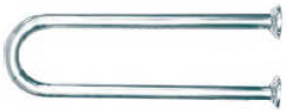

Stainless Steel
U-Shape Wall-Mounted
Support Rail
Model: SGR-01
Size: 710mm(W) x 190mm(H)
x 38mm(Dia)

Stainless Steel Flexible
Hinged U-Shape
Support Rail
Model: SGR-02
Size: 800mm(W) x 190mm(H)
x 25mm(Dia)

Stainless Steel Floor
& Wall-Mounted
Support Rail
Model: SGR-03
Size: 800mm(W) x 800mm(H)
x 38mm(Dia)

Stainless Steel
L-Shape Grab Rail
Model: SGR-04
Size: 700mm(W) x 700mm(H)
x 38mm(Dia)

Stainless Steel Grab Bar
Model: SGR-05
Size: 38mm(Dia) x 610mm(W)

Stainless Steel Towel Rail
- Model: STL-2824
  Size: 20mm(Dia) x 610mm(W)
- Model: STL-3230
  Size: 20mm(Dia) x 760mm(W)
- Model: STL-3836
  Size: 20mm(Dia) x 915mm(W)

Stainless Steel 2pc
Half 'U' Towel Rack
Model: STR-4528
Size: 710mm(W) x 160mm(D)

Stainless Steel 2pc
'U' Towel Rack
- Model: STR-4524
  Size: 610mm(W) x 160mm(D)
- Model: STR-5230
  Size: 760mm(W) x 160mm(D)

Stainless Steel
Towel Shelf
Model: STS-7524
Size: 610mm(W) x 255mm(D)

Stainless Steel
Towel Rack
Model: STS-8524
Size: 620mm(W) x 220mm(D)Top
& 150mm(D) Bottom x 127mm(H)

Stainless Steel
Multipurpose Rack
Model: SCR-810
Size: 762mm(W) x 210mm(D)

Stainless Steel
Double Glass Shelf
Model: SGS-1102
Size: 350mm(W) x 140mm(D)
x 415mm(H)

Stainless Steel
Triple Glass Shelf
Model: SGS-1403
Size: 350mm(W) x 140mm(D)
x 560mm(H)

T: 07 3559169 M: 016 7233169 E: tonemaxs@hotmail.com

Bicycle Racks
Stainless Steel
- Model: BYE 1111
  Size: 3600mm(W) x 950mm(D) x 720mm(H)
  Hot Dip Galvanized
- Model: BYEHD 2222
  Size: 3600mm(W) x 950mm(D) x 720mm(H)

Stainless Steel
Retractable Rack
- Model: SRR 300
  Size: 914mm(W) x 508mm(D) x 316mm(H)
- Model: SRR 400
  Size: 1219mm(W) x 747mm(D) x 416mm(H)
- Model: SRR 500
  Size: 1524mm(W) x 994mm(D) x 516mm(H)

(After Fold)
Stainless Steel
Retractable Rack

Stainless Steel
Clothes Rack
Model: SCR 807
Size: 2004mm(W) x 860mm(D) x 1770mm(H)

Stainless Steel
Clothes Rack
Model: SCR 806
Size: 1525mm(W) x 850mm(D) x 1770mm(H)

Stainless Steel
Clothes Rack
Model: SCR 805
Size: 745mm(W) x 1230mm(D) x 1670mm(H)

Stainless Steel
Clothes Rack
Model: SCR 808
Size: 900mm(W) x 460mm(D) x 1200mm(H)

Stainless Steel
Clothes Rack
Model: SCR 809
Size: 1200mm(W) x 580mm(D) x 1200mm(H)

Stainless Steel & Aluminium
Letter Box
(Please contact us for quotation)

Stainless Steel ATM Box
c/w Lock
Model: ATM-033/SS
Size: 220mm(W) x 75mm(D) x 240mm(H)

Custom Made All Kind Of
Stainless Steel Baskets

Crab Crusher
Size: 305mm(W) x 50mm(D) x 130mm(H)